LANCMAN 2002 PLUS
LANCMAN 2002 H PLUS
LANCMAN 2002 VF PLUS
LANCMAN 2002 HVF PLUS

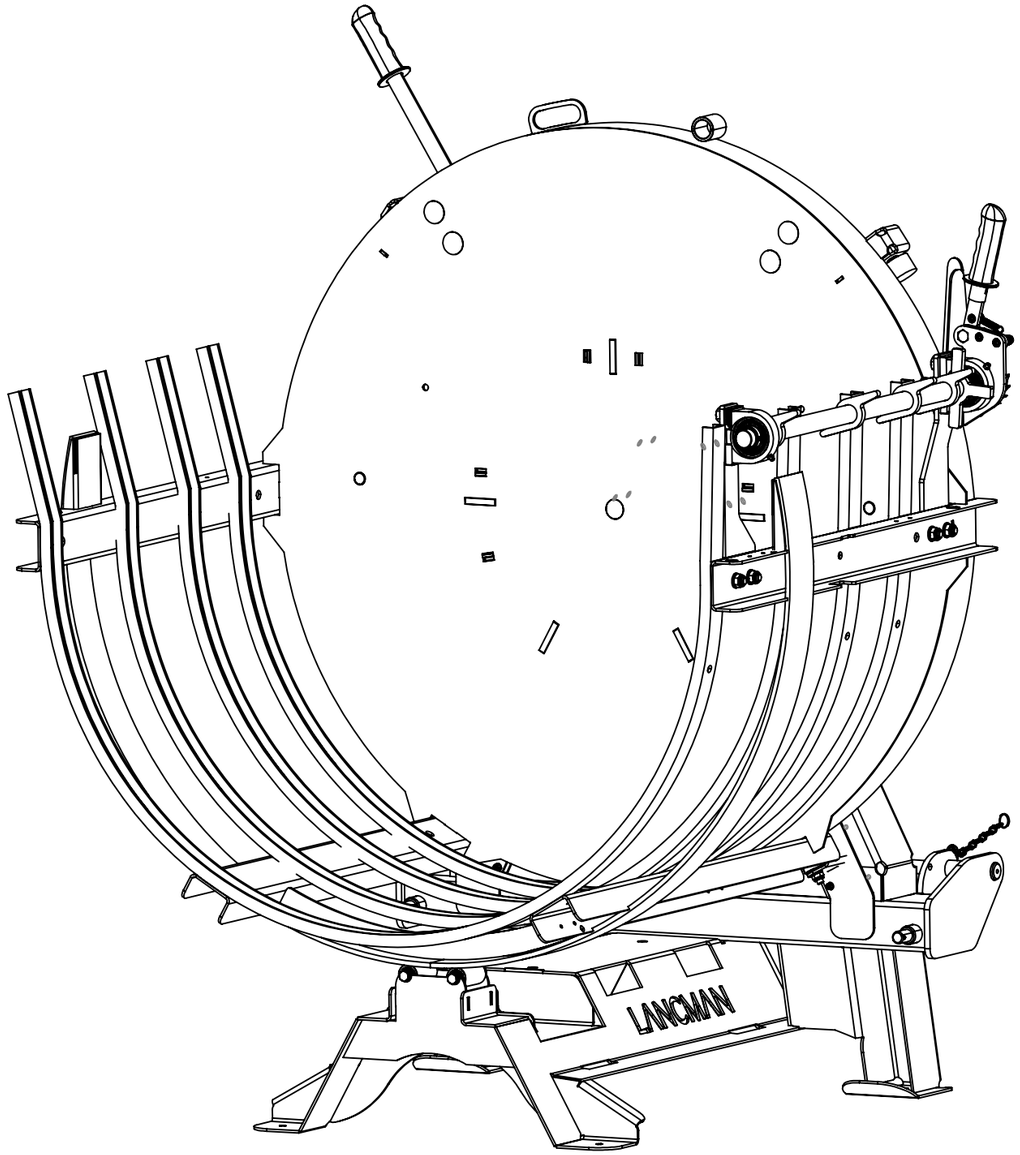

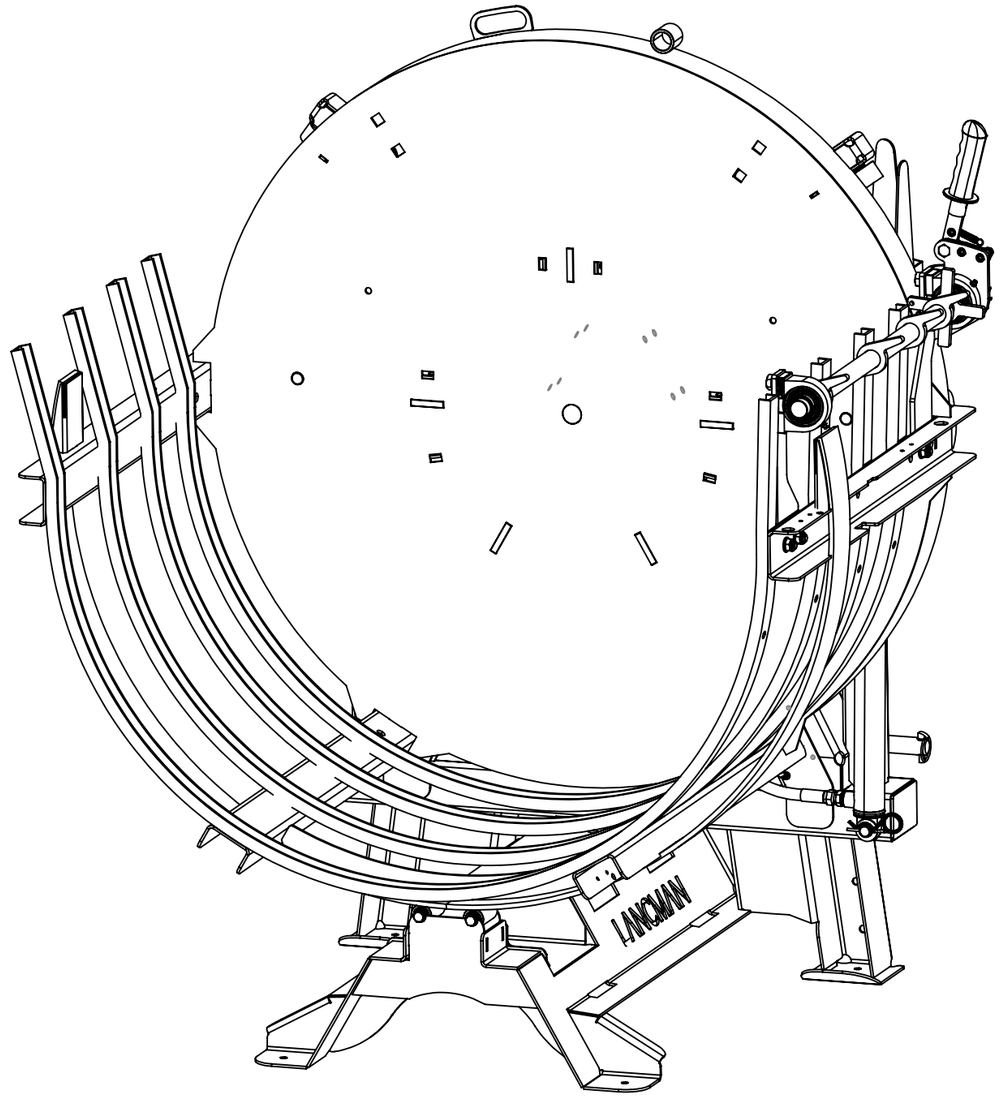

LANCMAN® by GOMARK

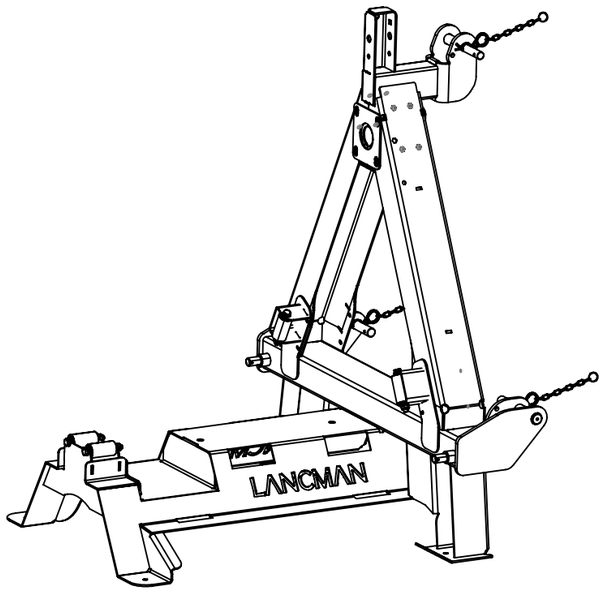

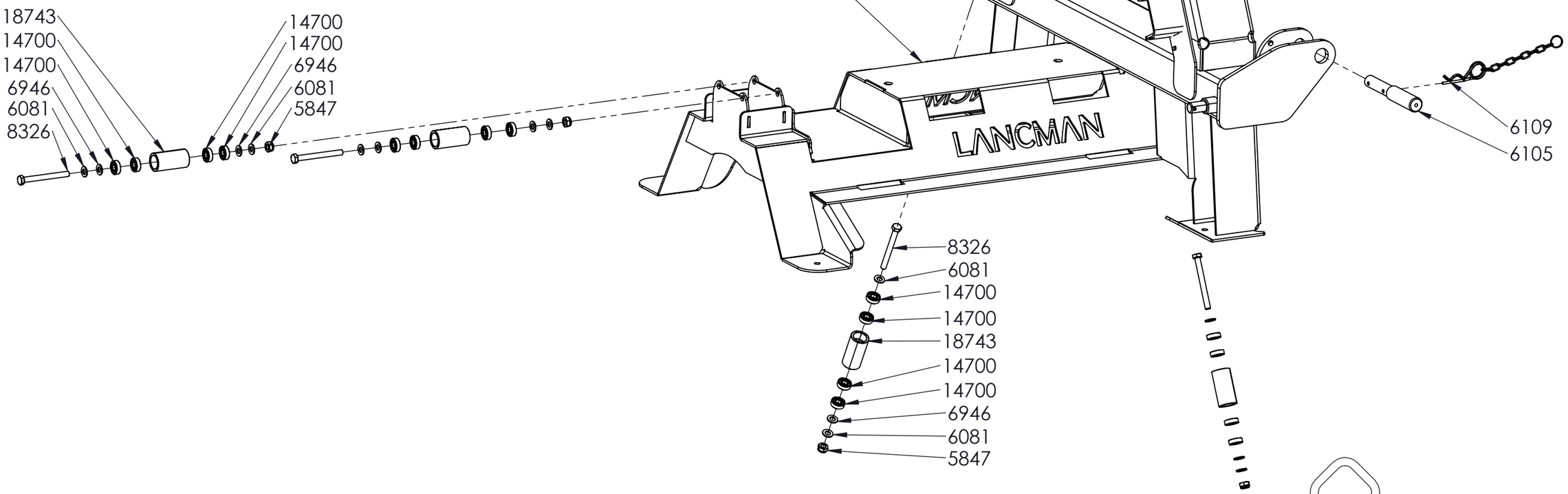

LANCMAN 2002 PLUS
LANCMAN 2002 H PLUS

LANCMAN® by GOMARK

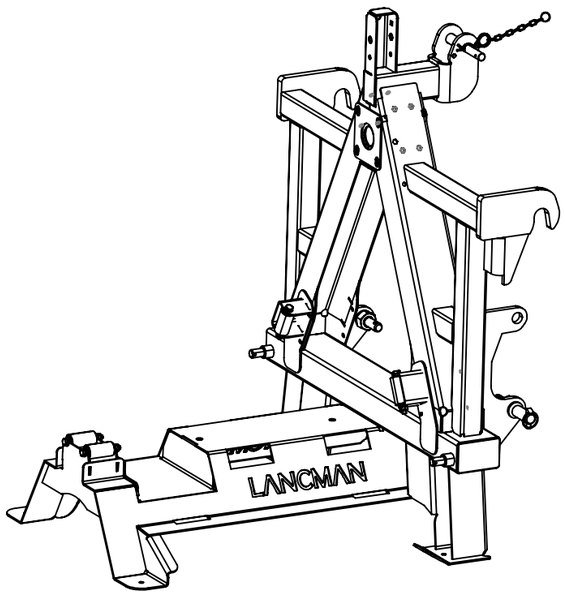

LANCMAN 2002 VF PLUS
LANCMAN 2002 HVF PLUS

LANCMAN® by GOMARK

LANCMAN 2002 PLUS
LANCMAN 2002 H PLUS

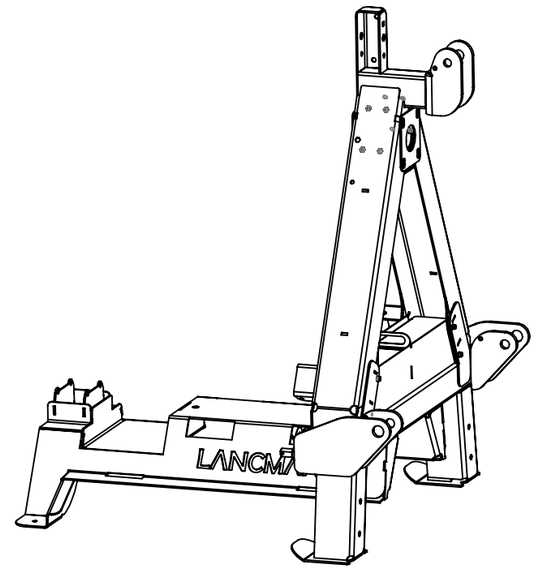

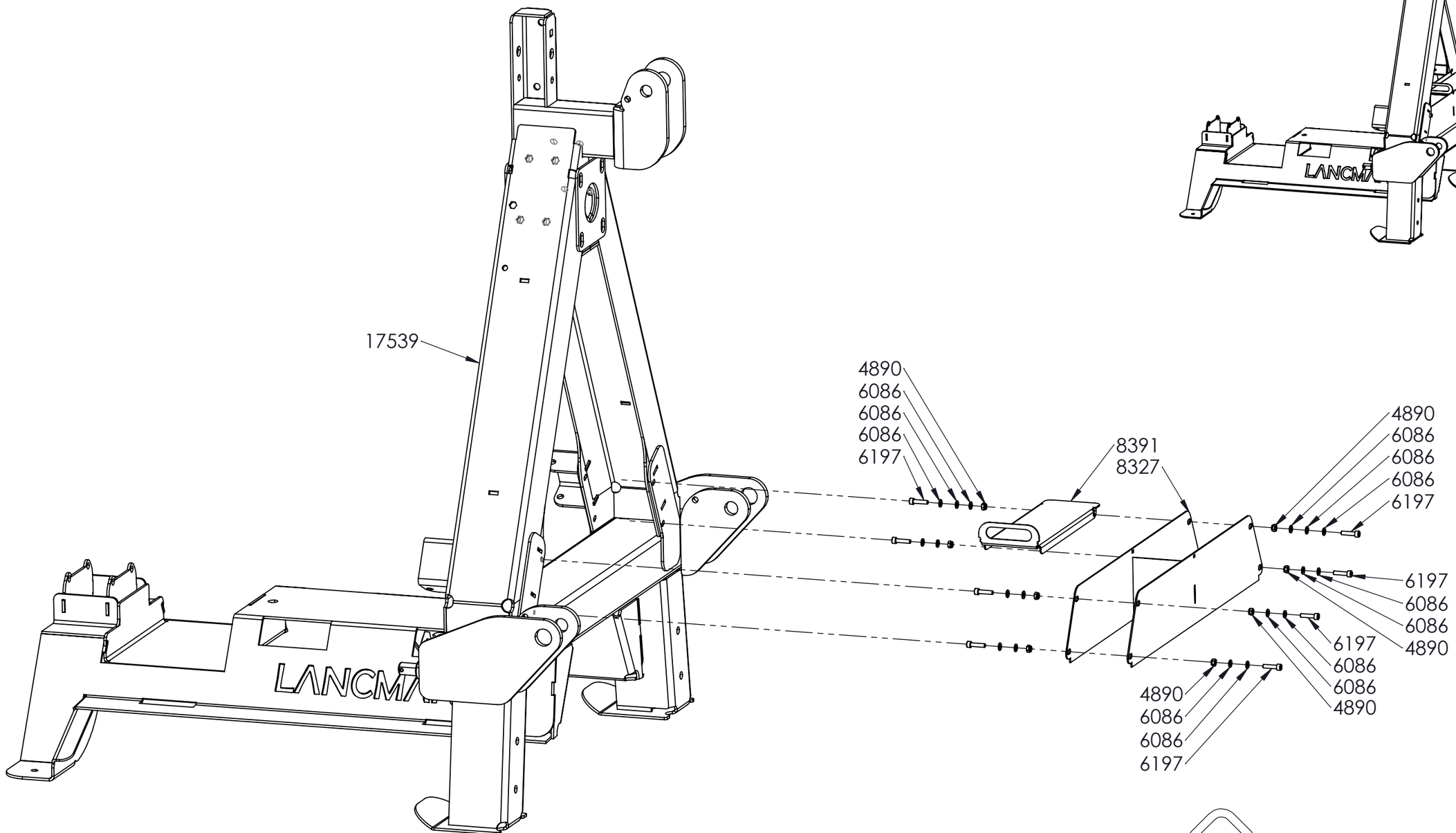

LANCMAN® by GOMARK

LANCMAN 2002 VF PLUS
LANCMAN 2002 HVF PLUS

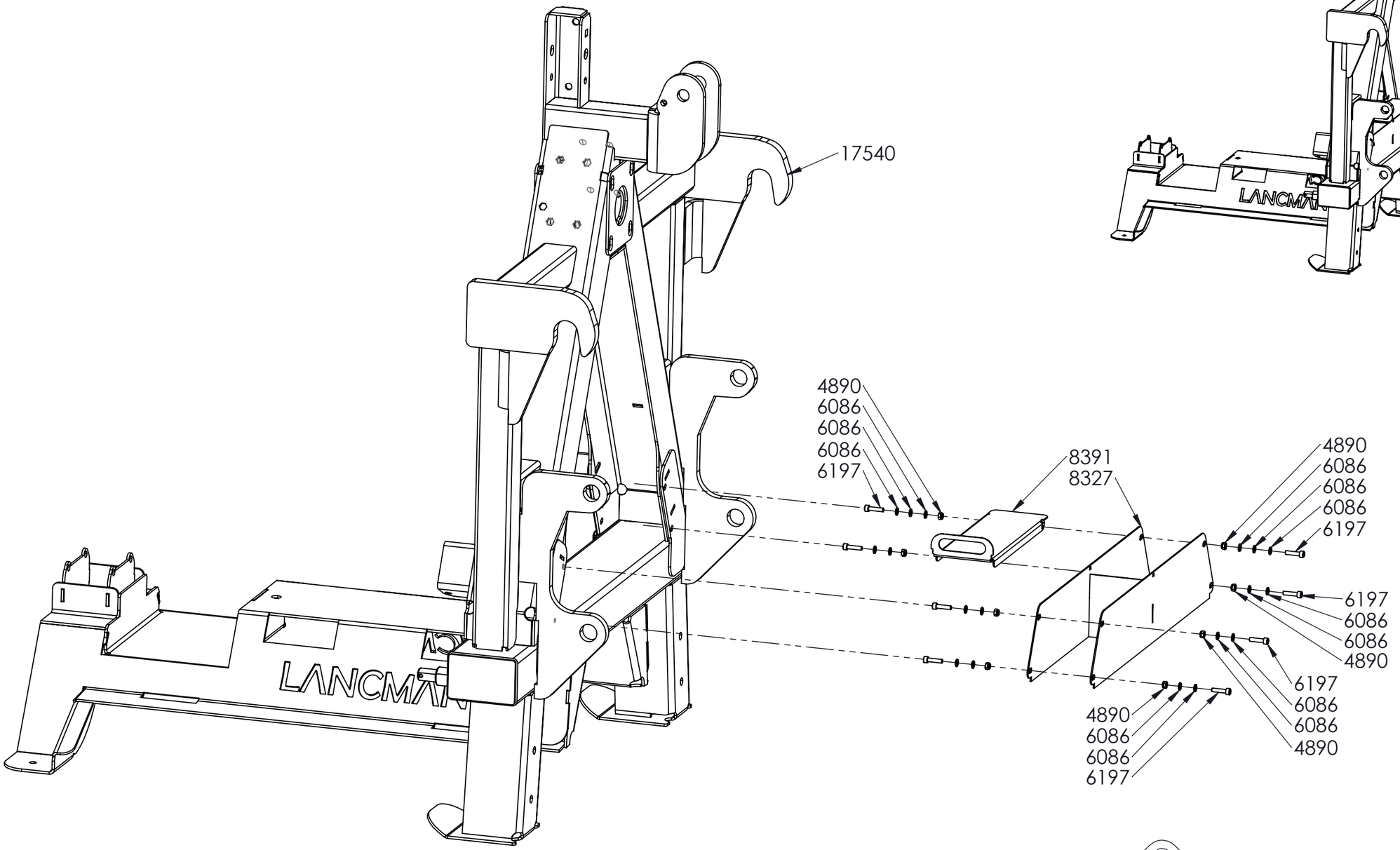

LANCMAN® by GOMARK

LANCMAN 2002 PLUS

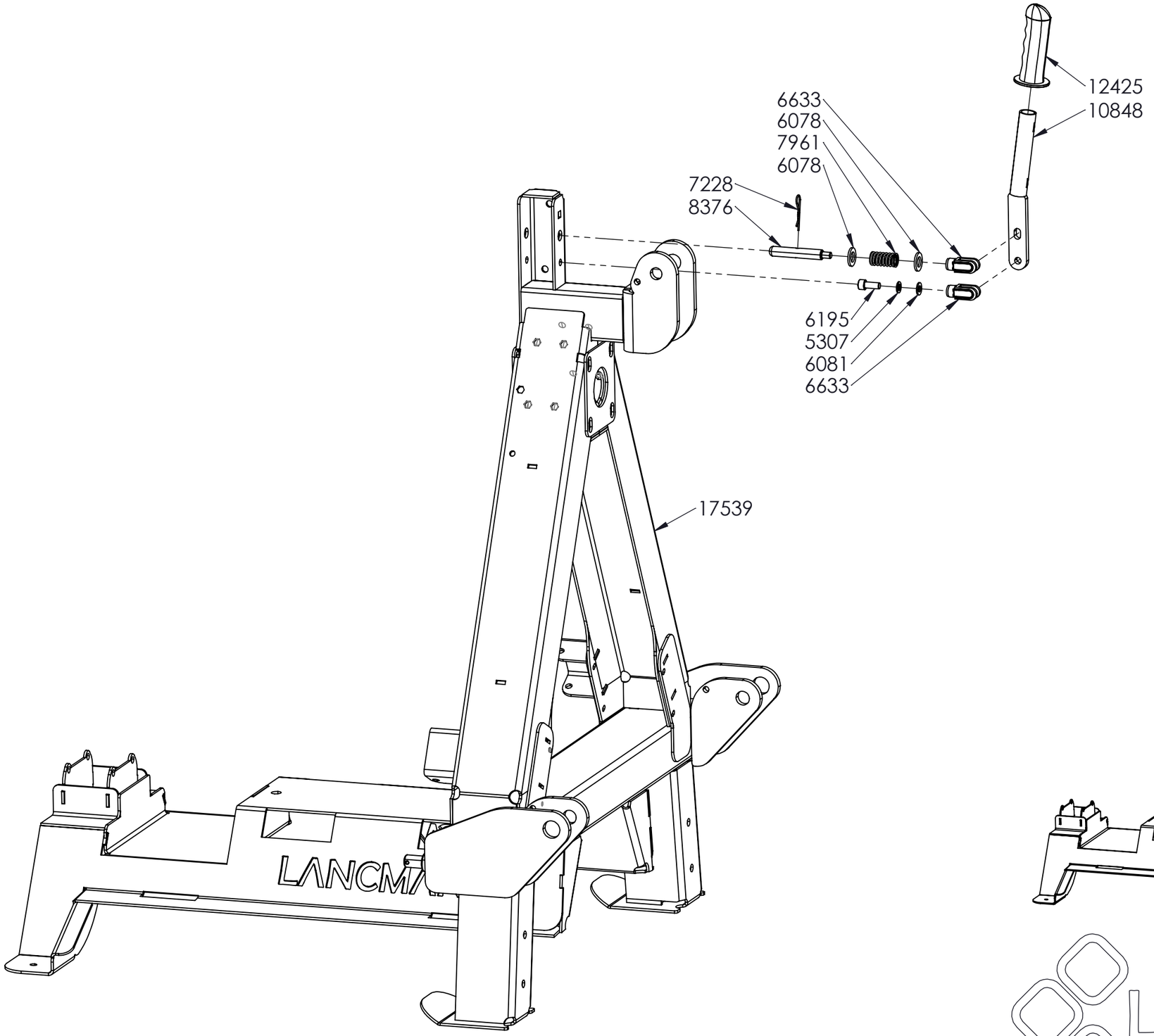

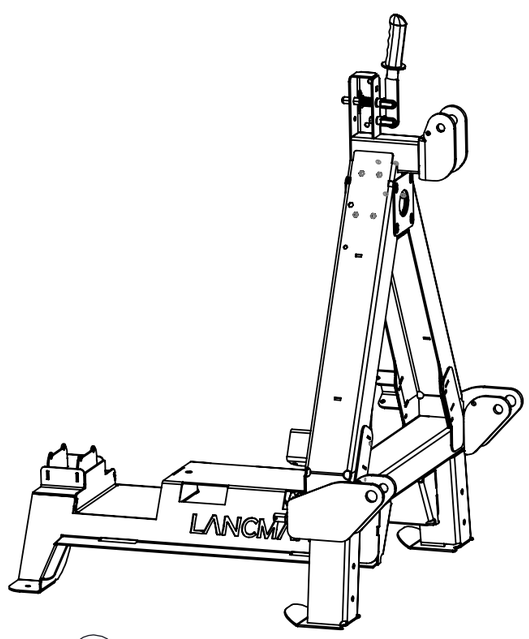

LANCMAN® by GOMARK

LANCMAN 2002 VF PLUS

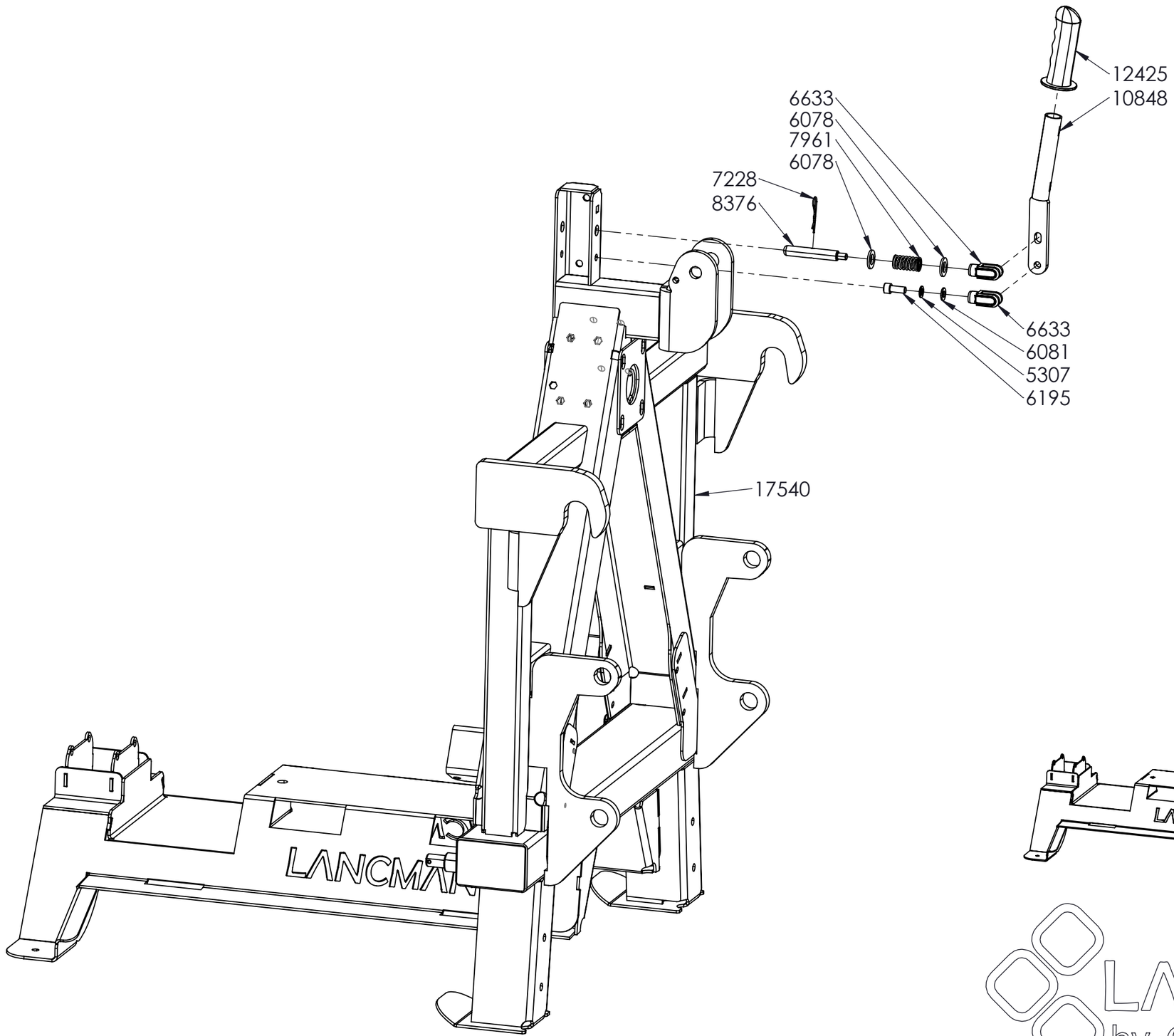

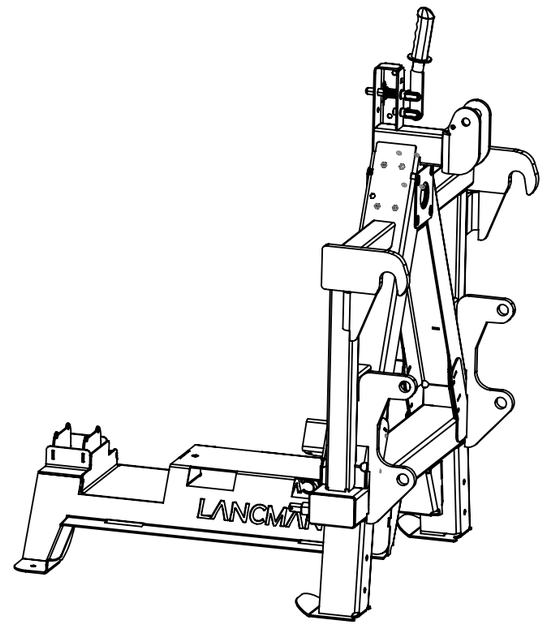

LANCMAN® by GOMARK

LANCMAN 2002 H PLUS

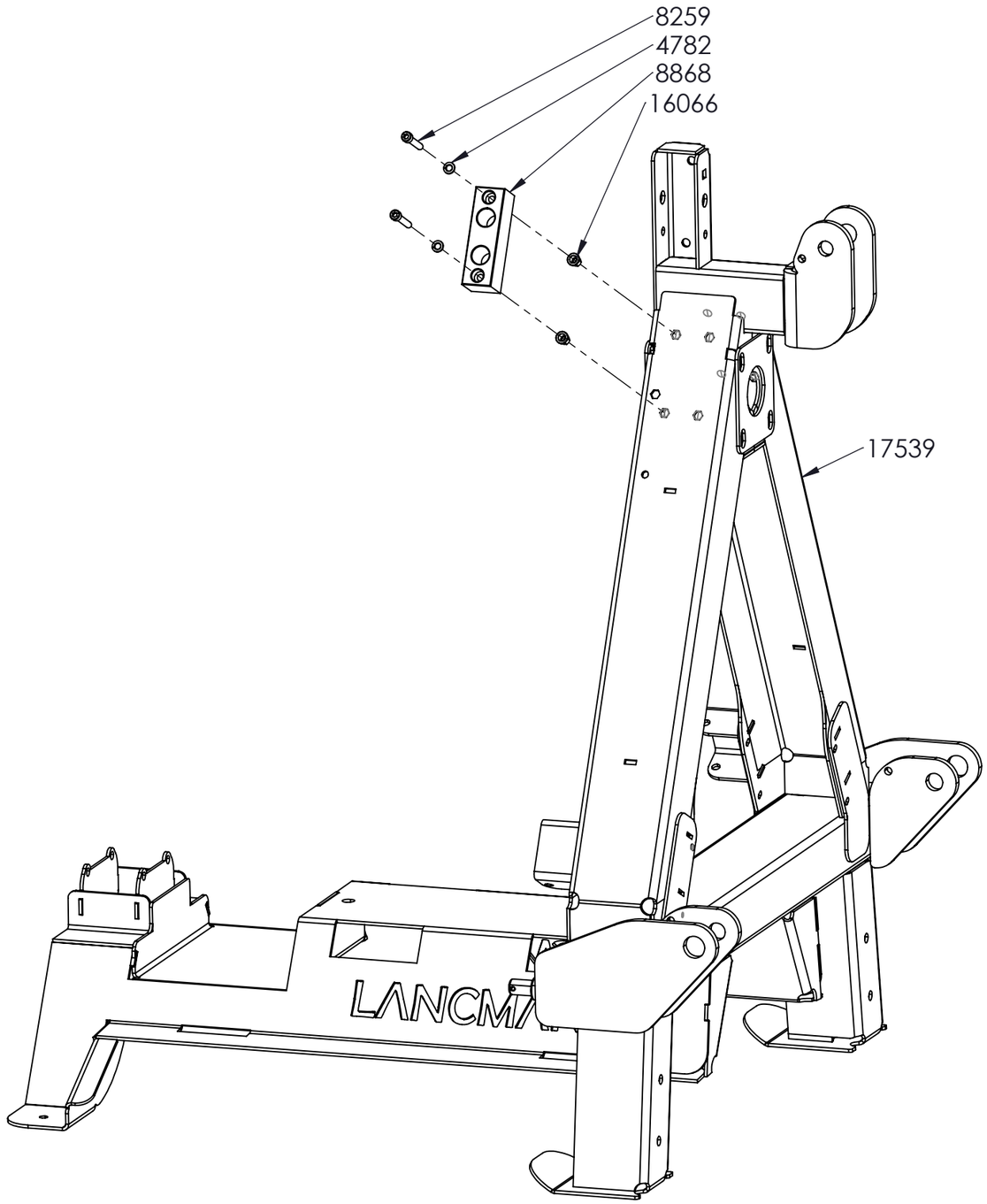

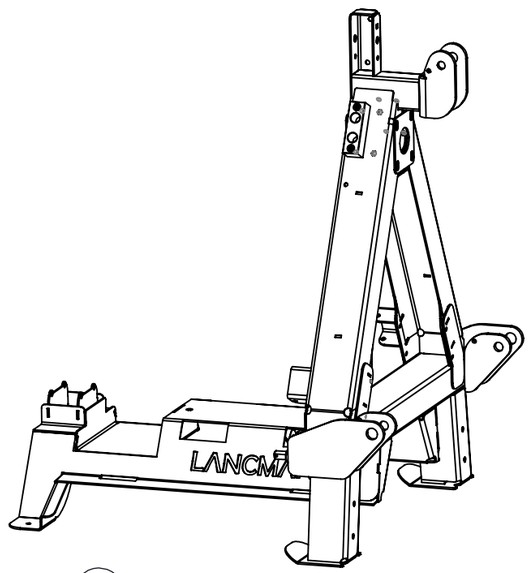

LANCMAN® by GOMARK

LANCMAN 2002 HVF PLUS

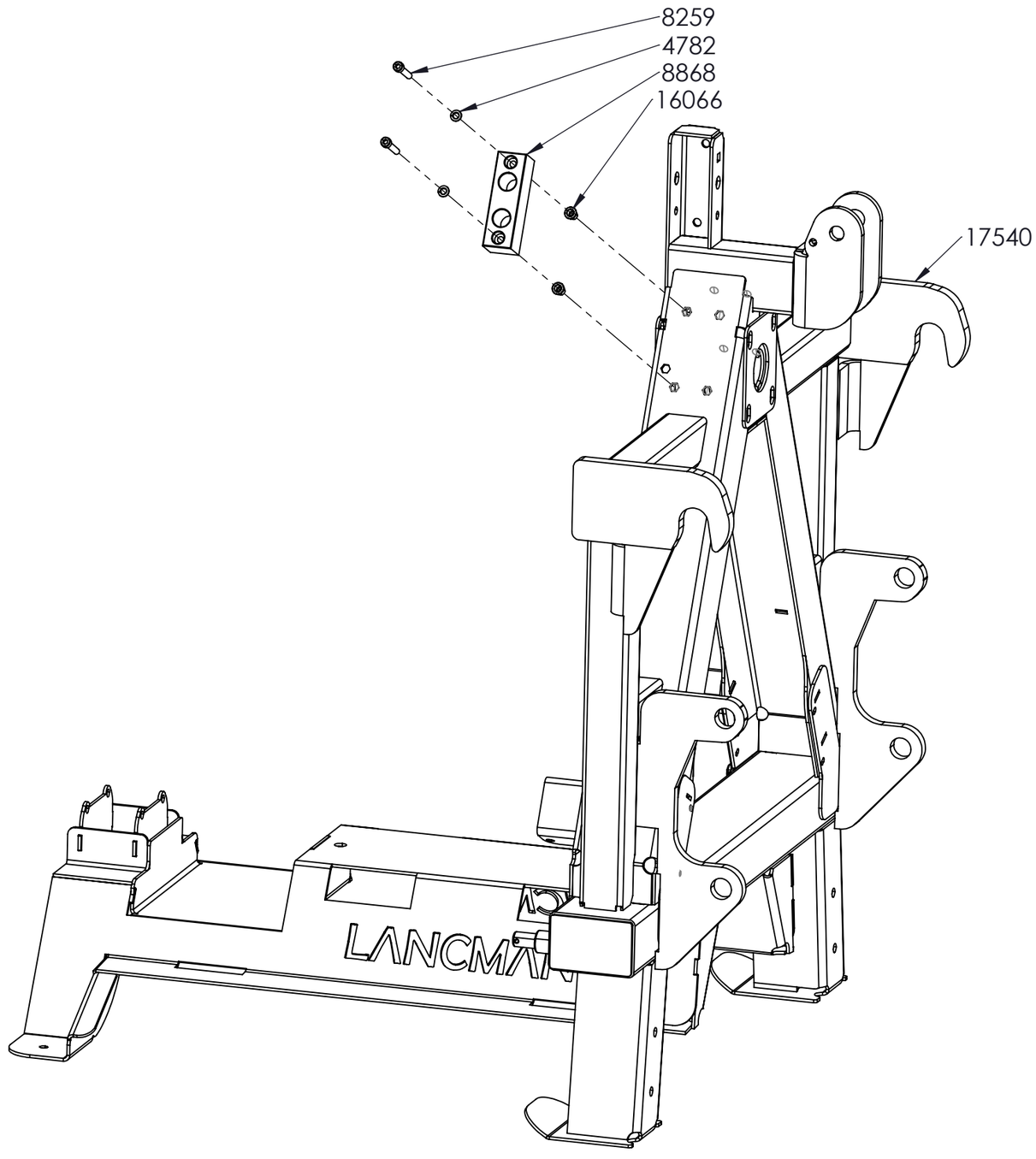

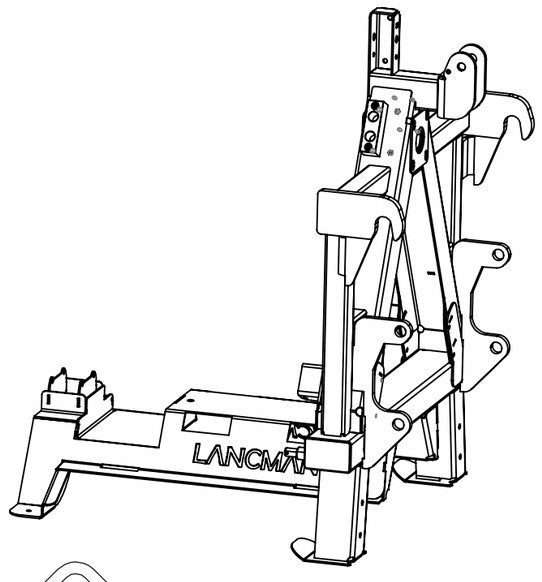

LANCMAN® by GOMARK

LANCMAN 2002 PLUS
LANCMAN 2002 H PLUS

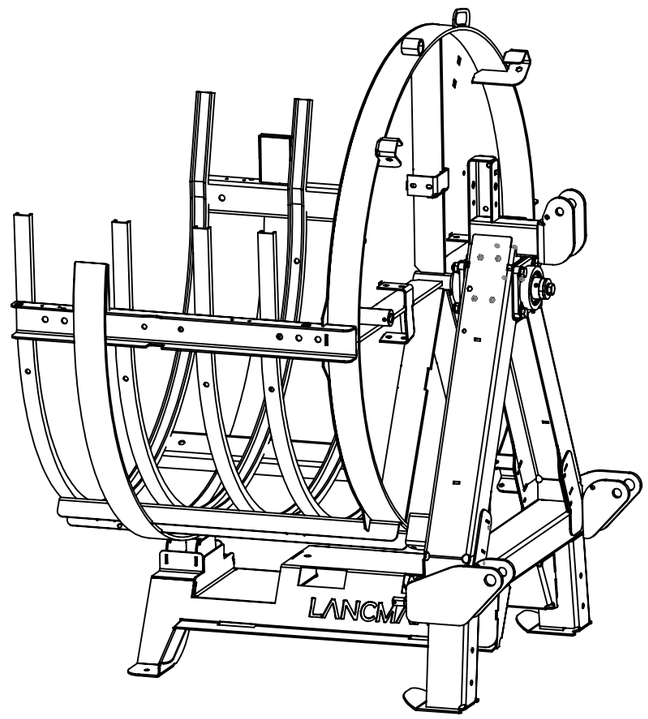

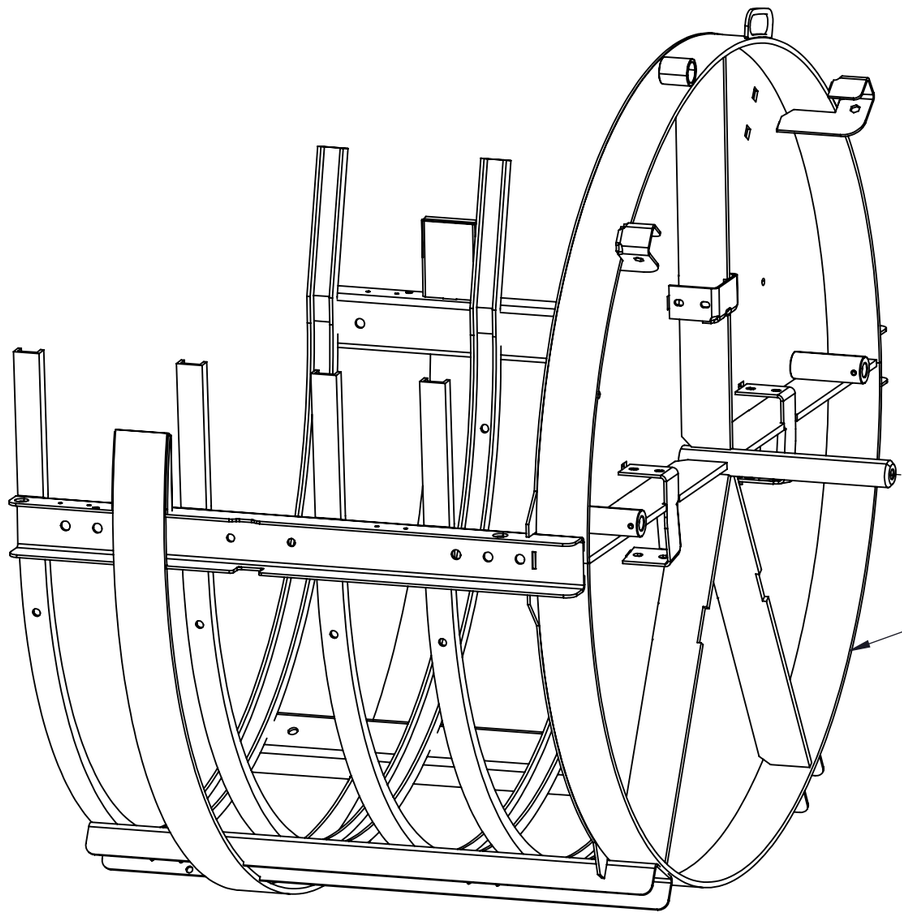

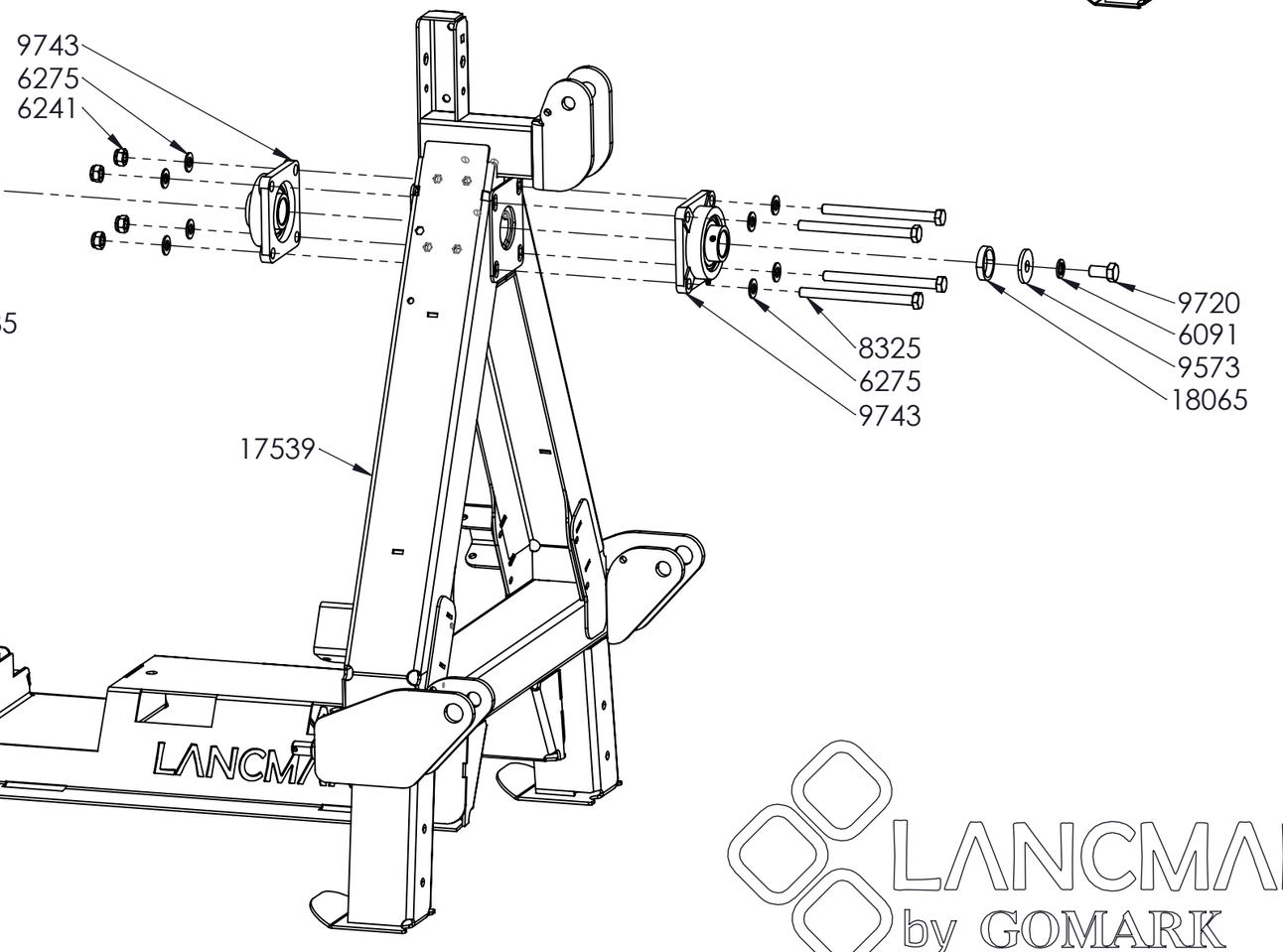

LANCMAN® by GOMARK

LANCMAN 2002 VF PLUS
LANCMAN 2002 HVF PLUS

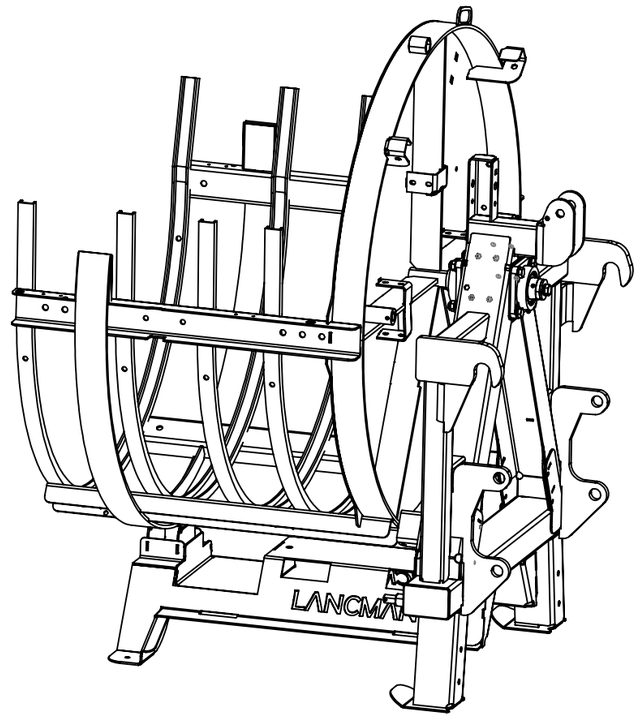

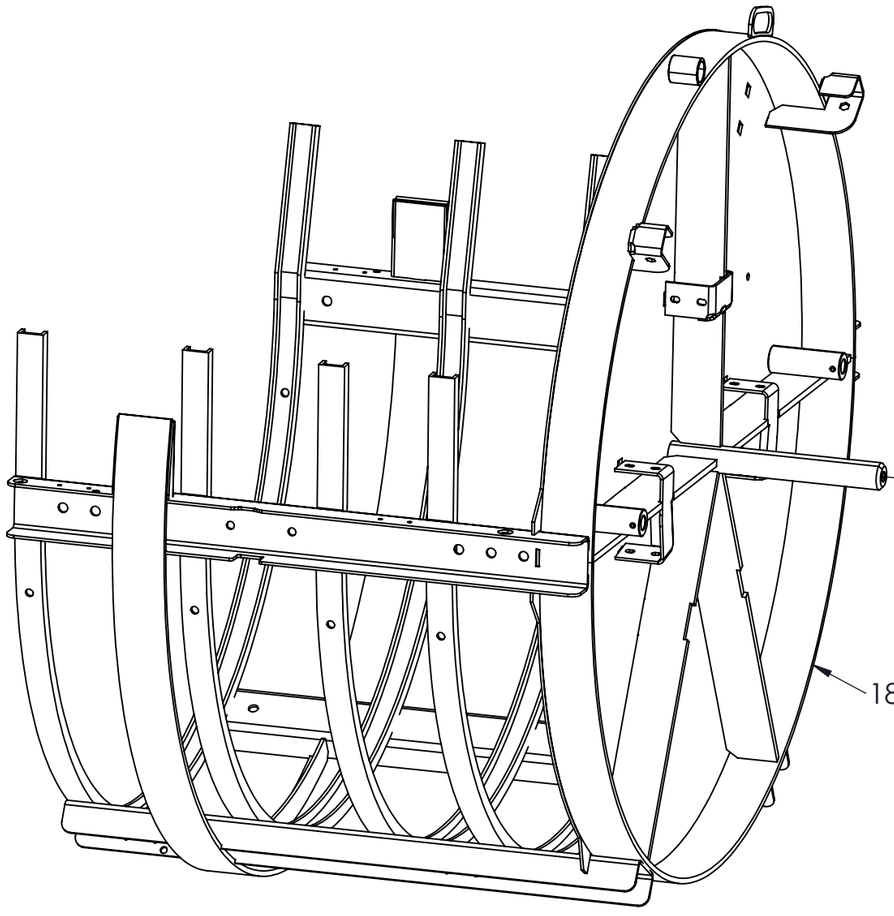

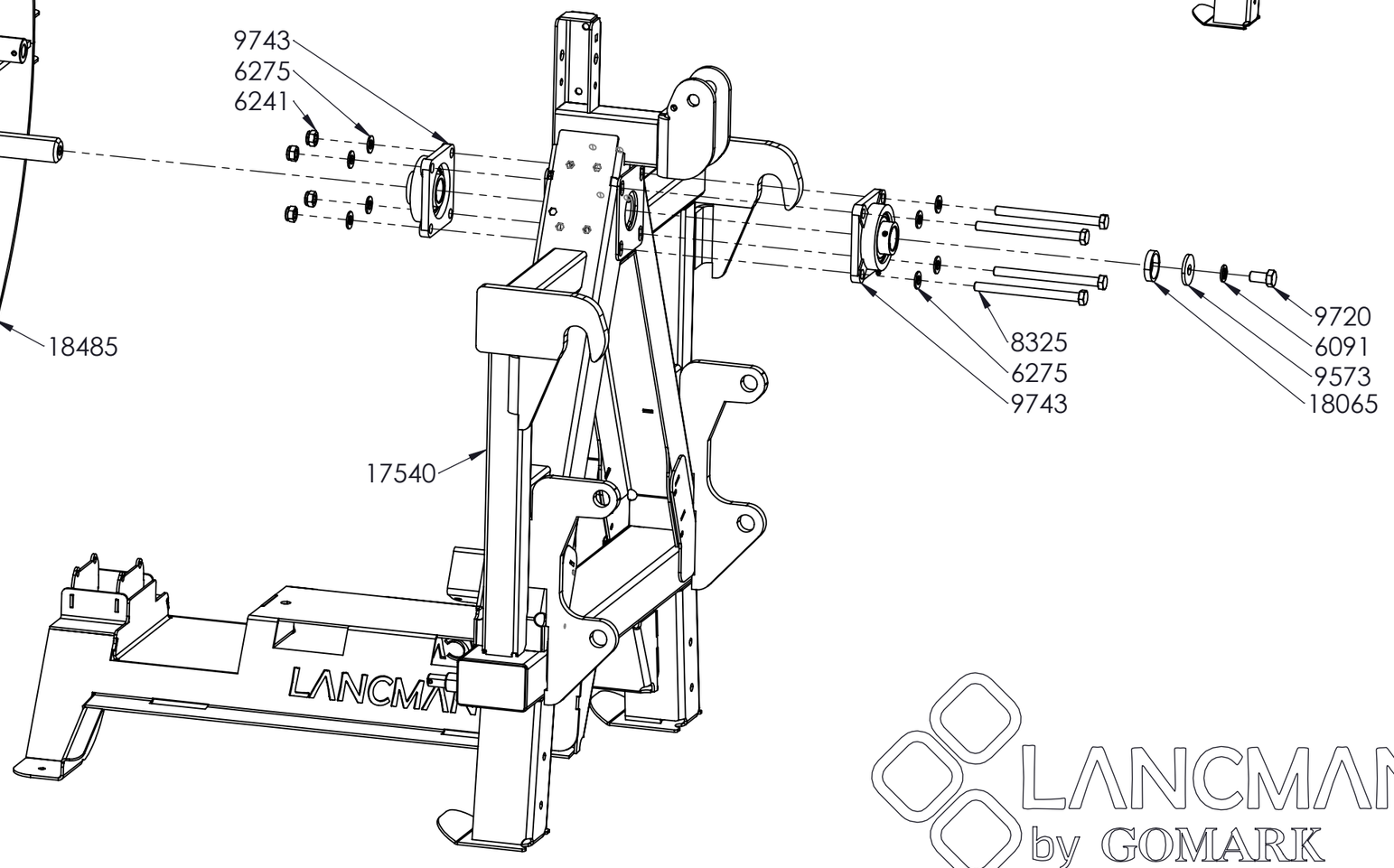

LANCMAN® by GOMARK

LANCMAN 2002 PLUS
LANCMAN 2002 VF PLUS

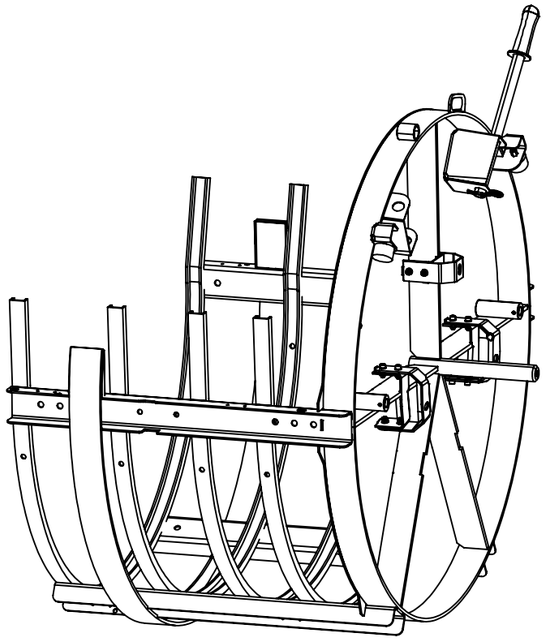

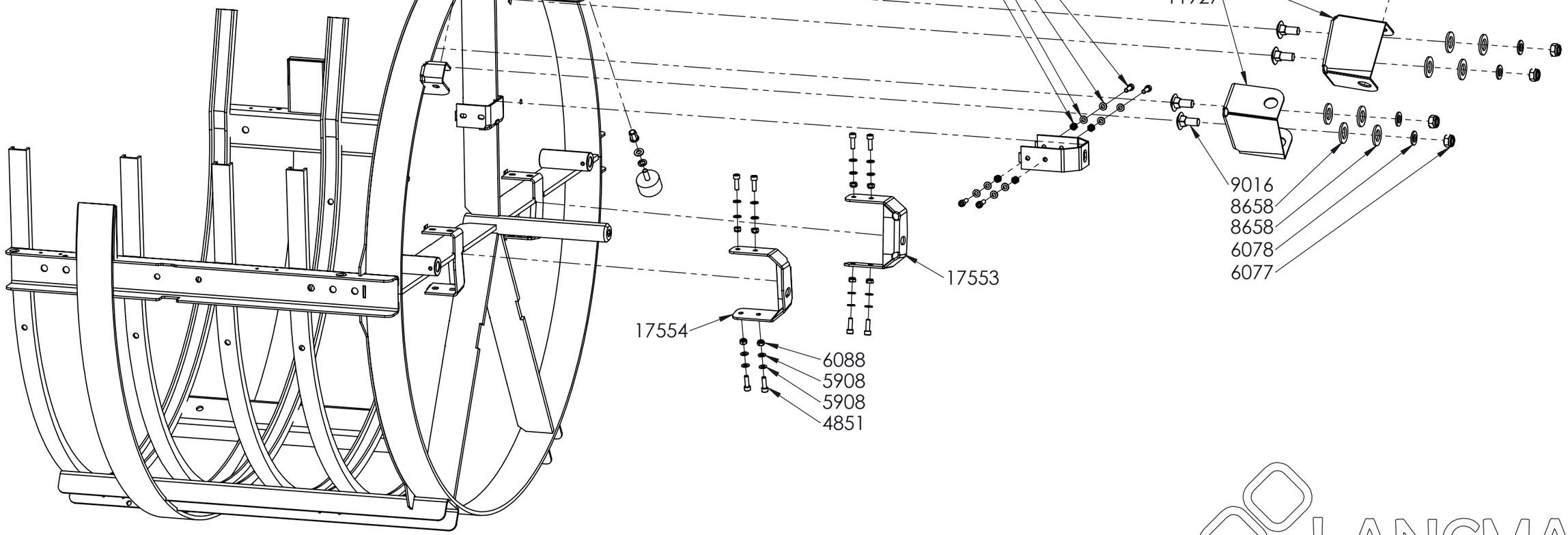

LANCMAN® by GOMARK

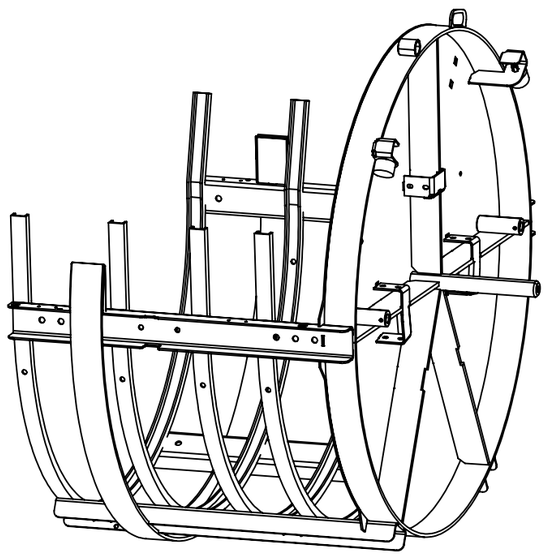

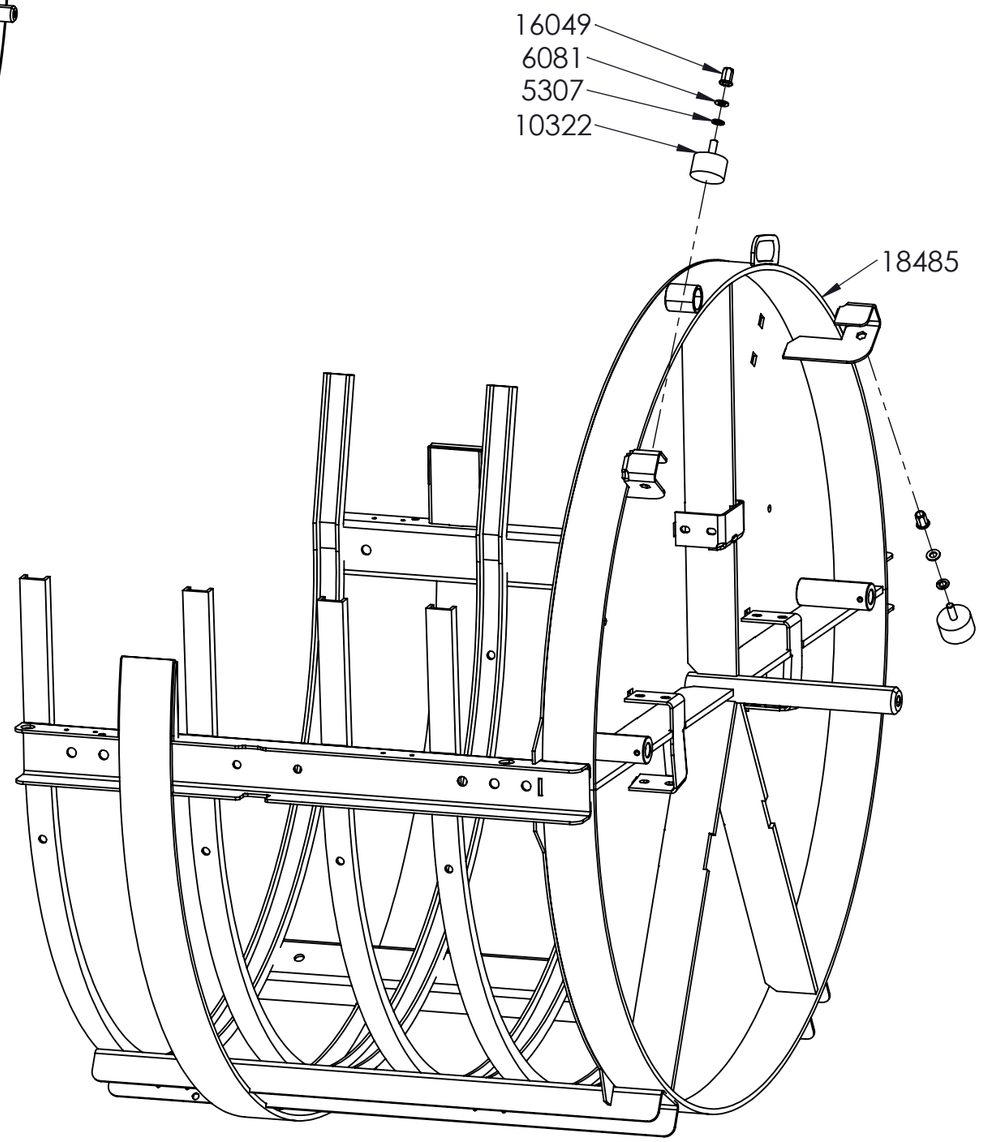

LANCMAN® by GOMARK

LANCMAN 2002 PLUS
LANCMAN 2002 H PLUS
LANCMAN 2002 VF PLUS
LANCMAN 2002 HVF PLUS

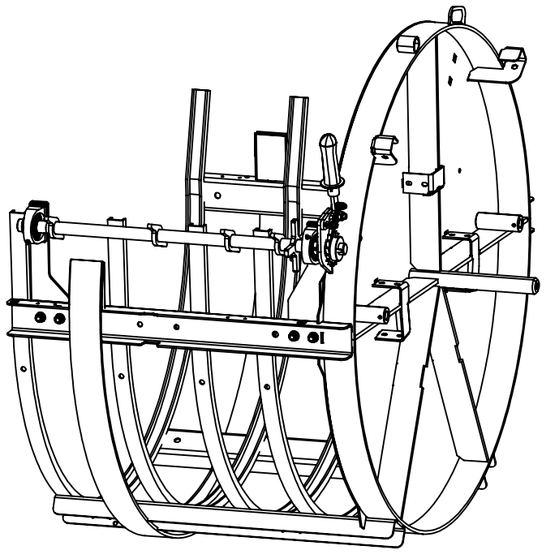

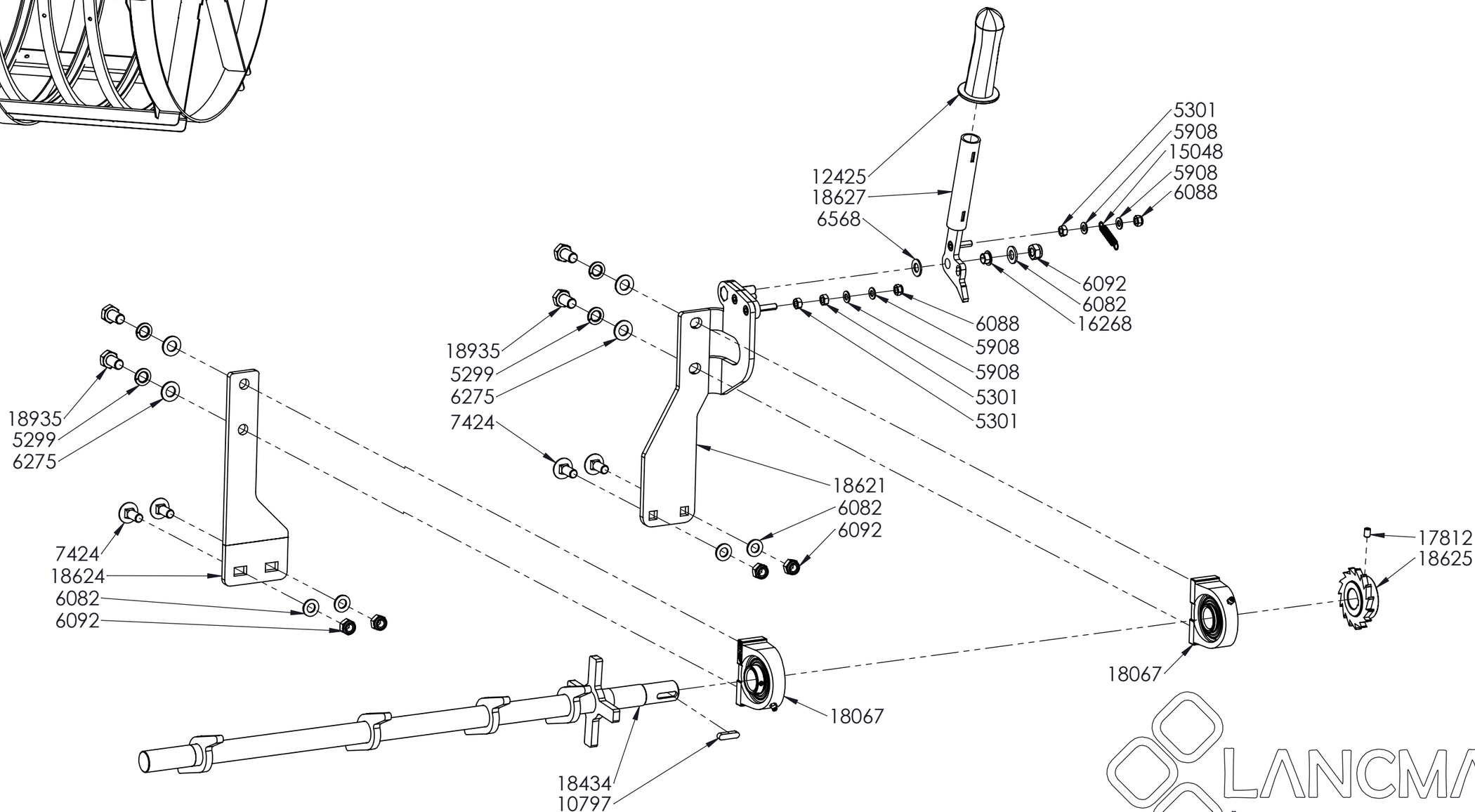

LANCMAN® by GOMARK

LANCMAN 2002 H PLUS

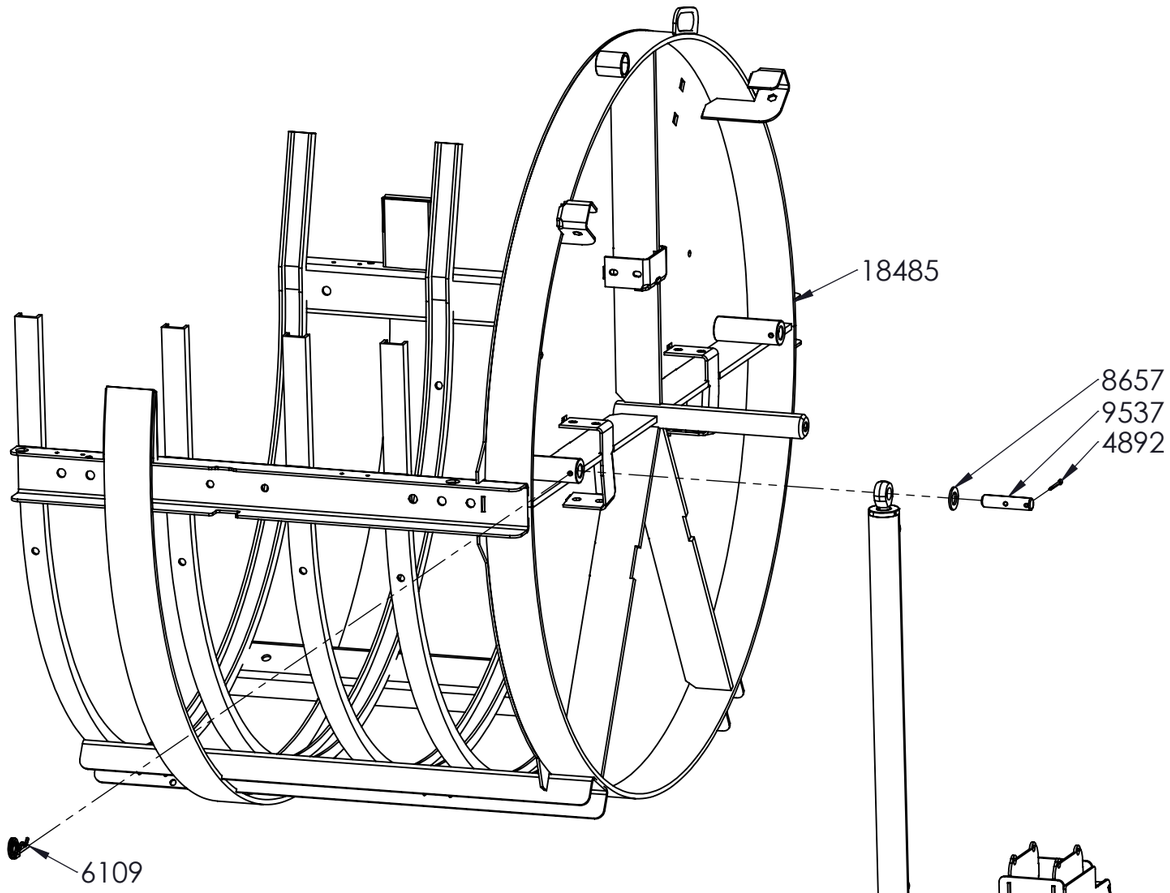

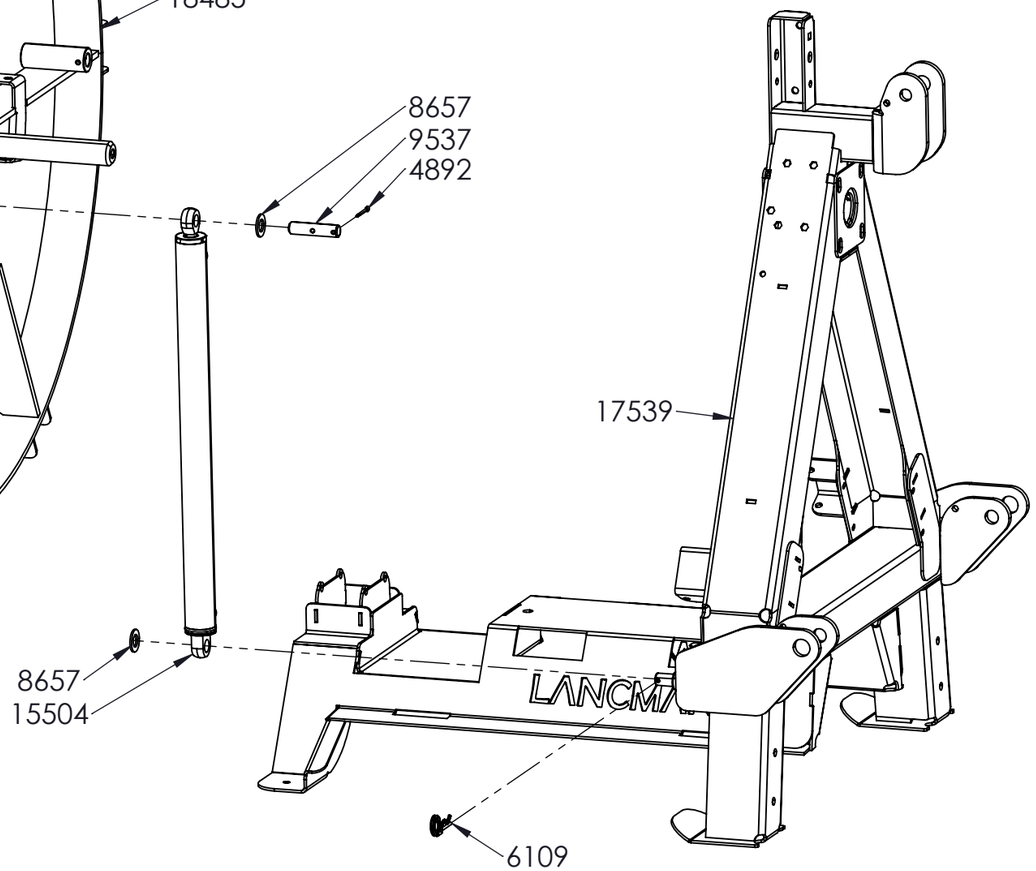

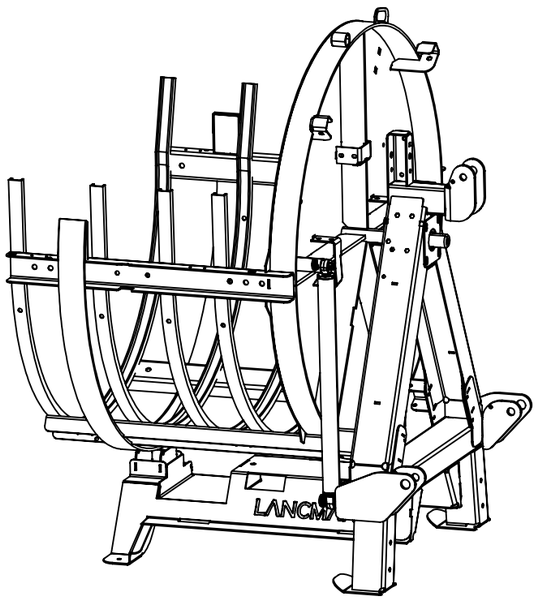

LANCMAN® by GOMARK

LANCMAN 2002 HVF PLUS

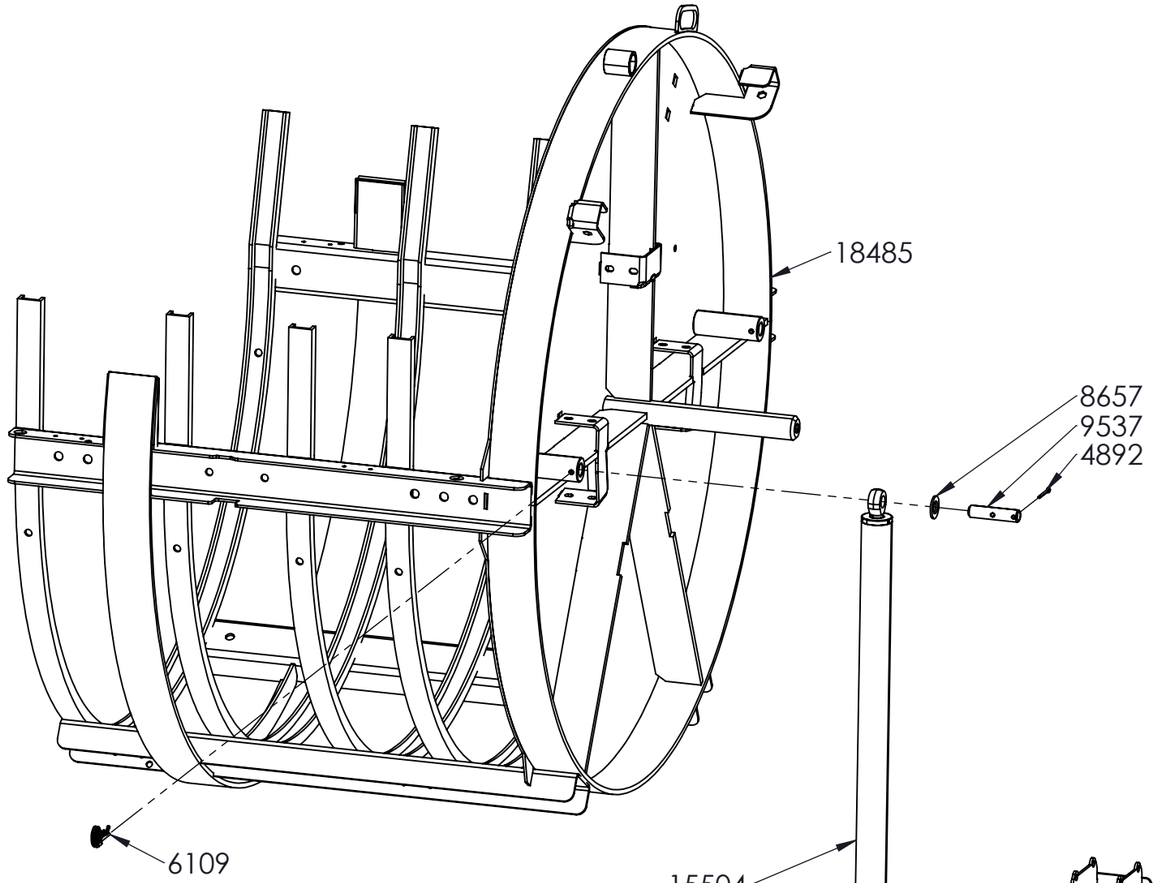

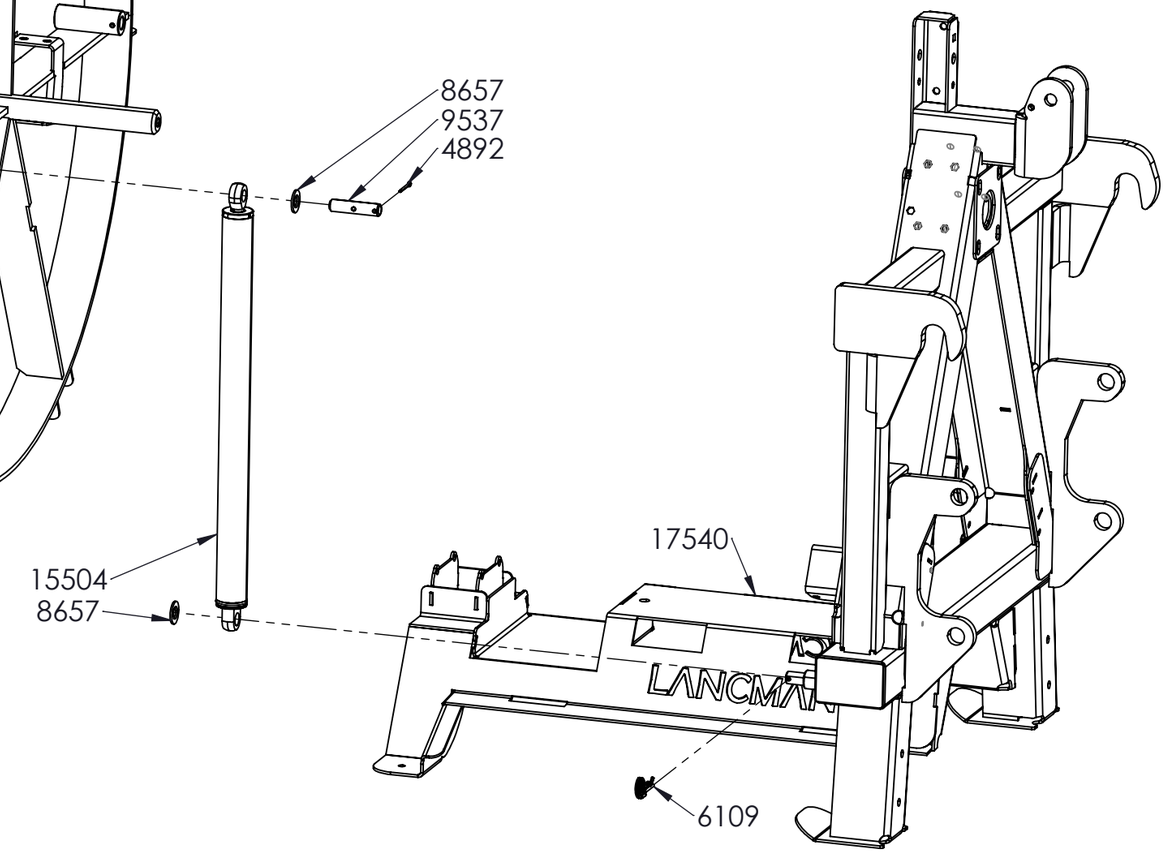

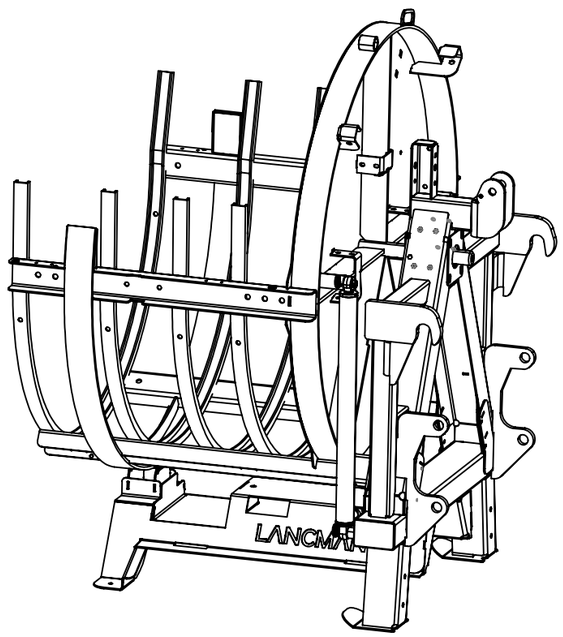

LANCMAN® by GOMARK

LANCMAN 2002 H PLUS
LANCMAN 2002 HVF PLUS

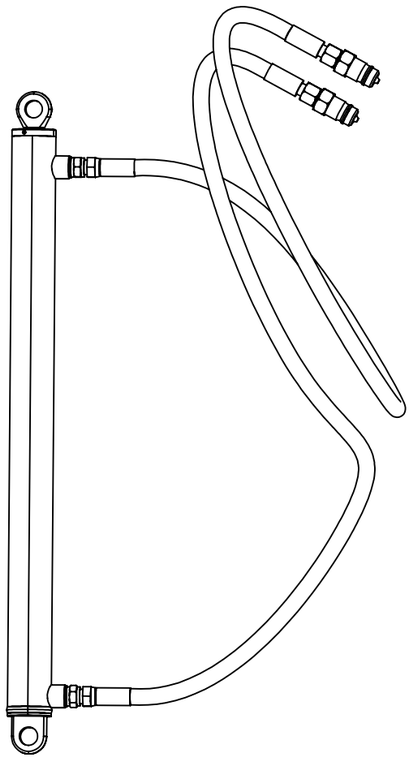

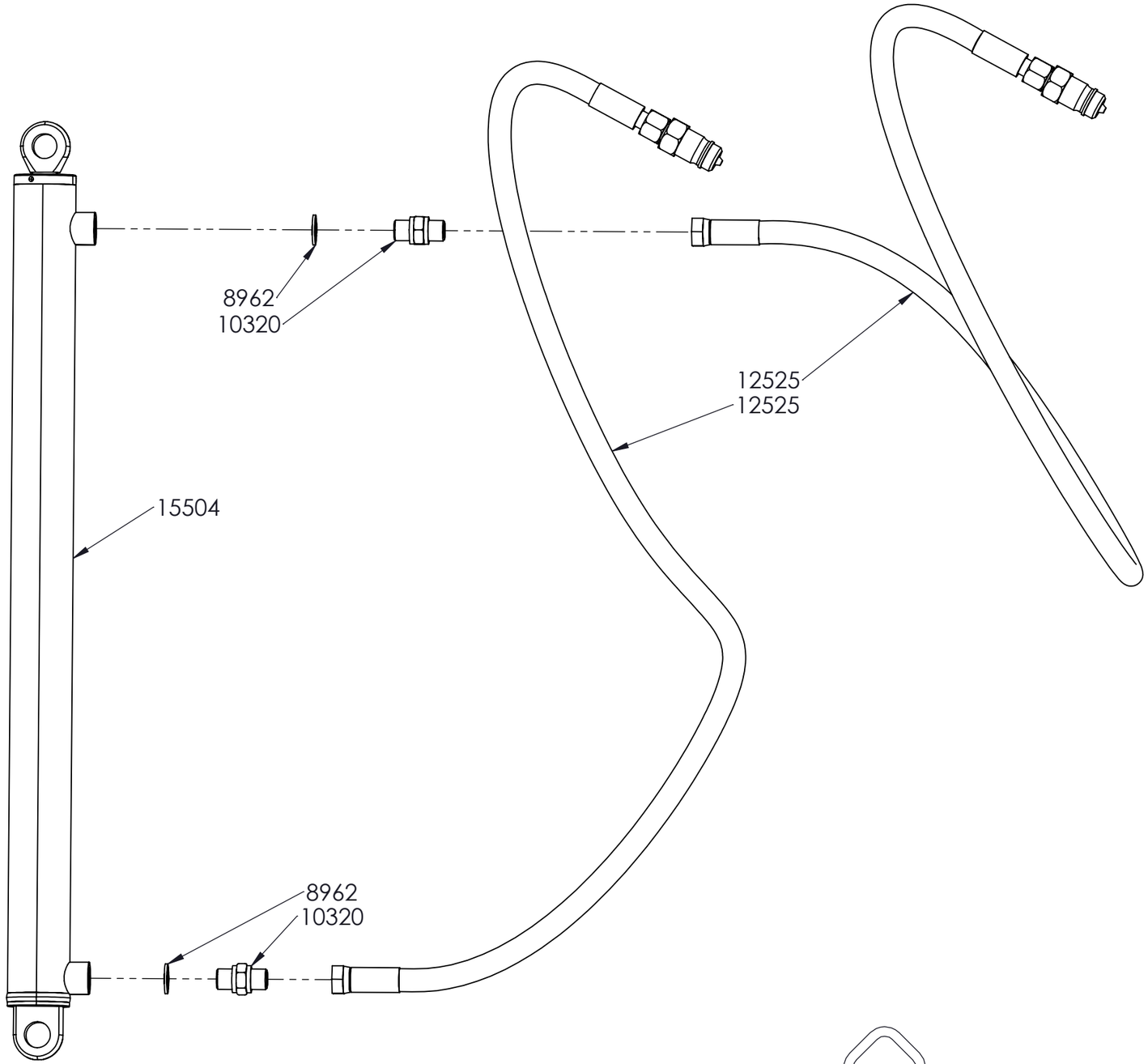

LANCMAN® by GOMARK

LANCMAN 2002 PLUS
LANCMAN 2002 H PLUS

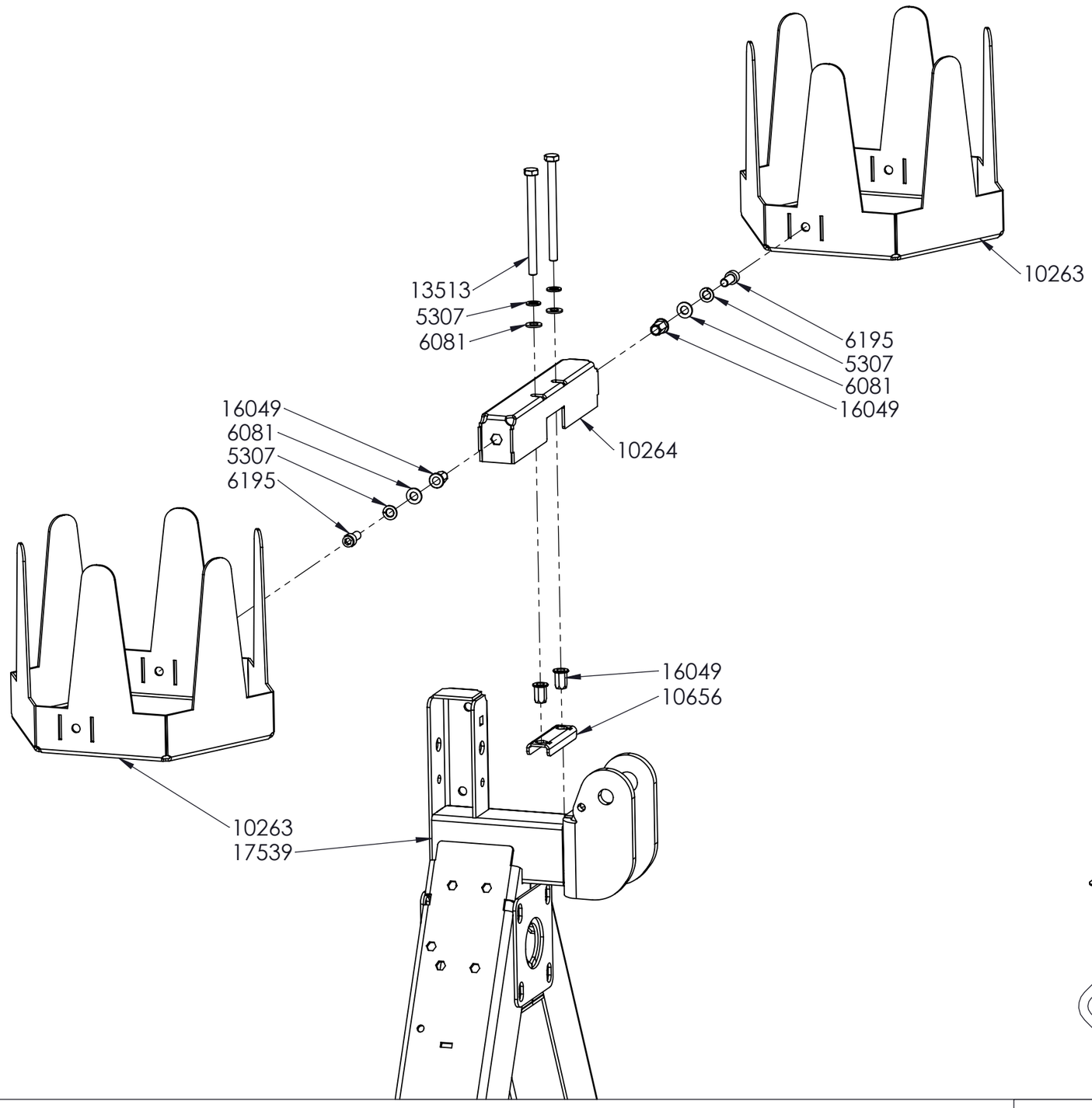

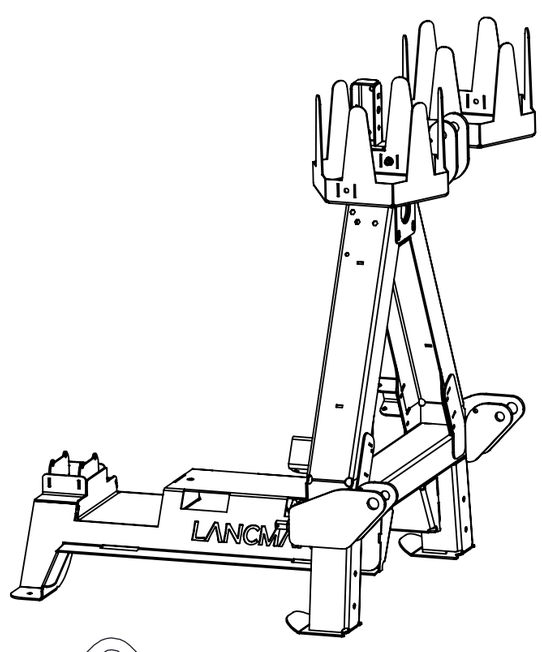

LANCMAN® by GOMARK

LANCMAN 2002 VF PLUS
LANCMAN 2002 HVF PLUS

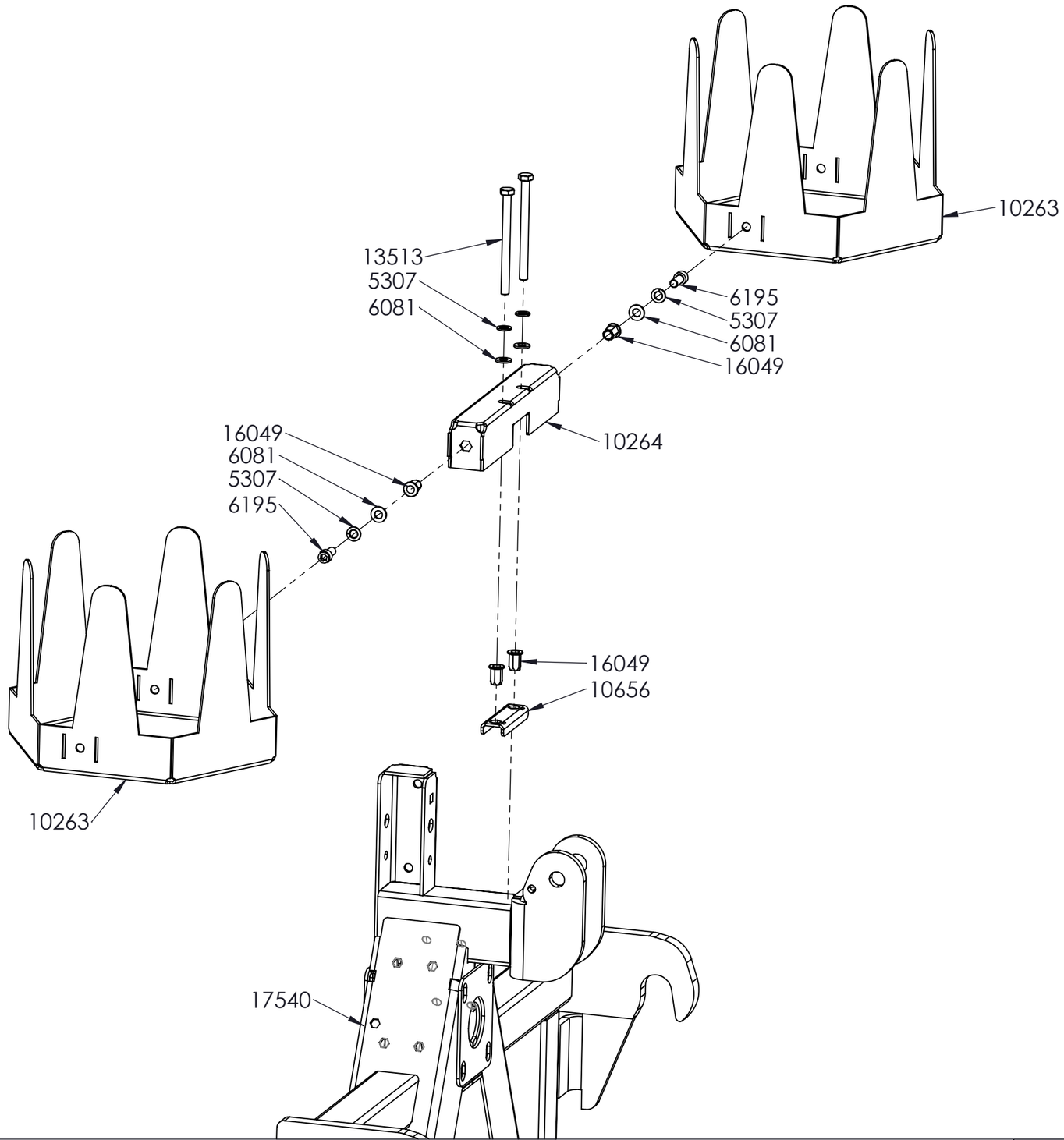

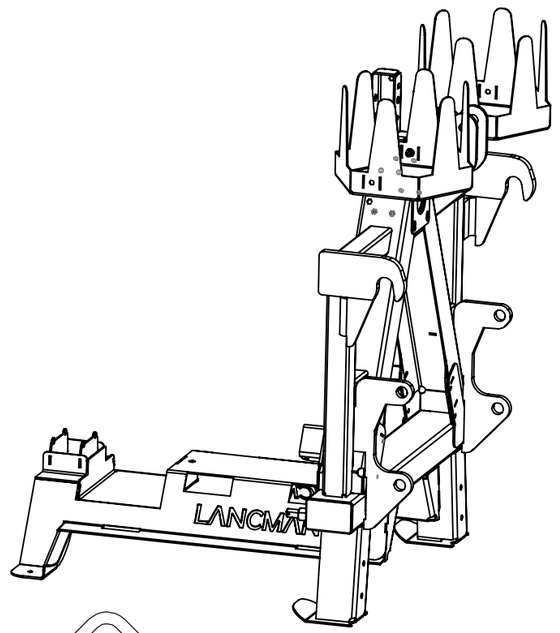

LANCMAN® by GOMARK

LANCMAN 2002 H PLUS
LANCMAN 2002 HVF PLUS

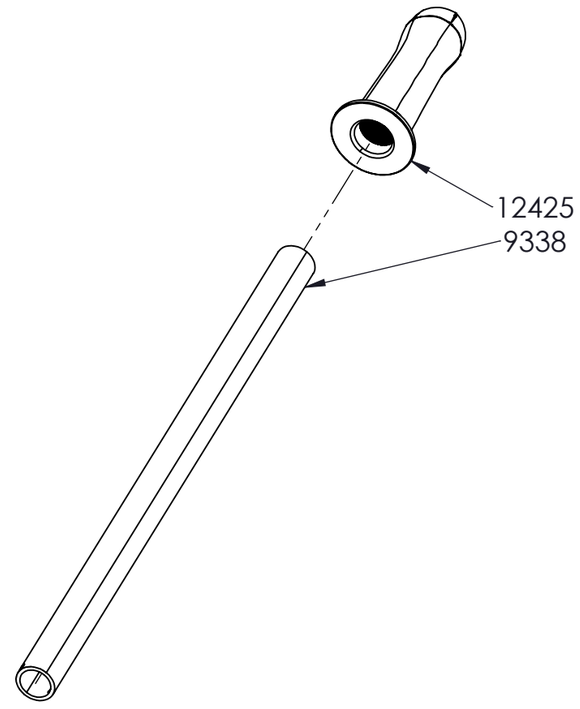

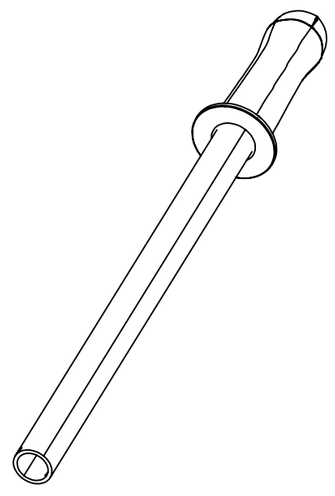

LANCMAN® by GOMARK