ID: 19548

ENG

CIRCULAR SAW WITH CONVEYOR BELT LANCMAN
SAF 707
Type: TT, STR, STEL, STR+EL, BRIGGS STR, HND-STR

V: 2.4



LANCMAN SAF 707

CE

USER'S MANUAL

LANCMAN® by GOMARK

GOMARK d.o.o.
Čeplje 52,
SI-3305 Vransko, Slowenien
http://www.LANCMAN.si

The user manual is the intellectual property of the company GOMARK d.o.o.
Therefore any reproduction and copying of the instructions without the owner's prior knowledge is a crime.

Issued in JULY 2024, contains a declaration of conformity.

WARNING
THIS MACHINE CAN BE MANAGED
BY A PERSON WHO IS FAMILIAR WITH
THE USER'S MANUAL AND
SAFETY WARNINGS ONLY!

IF THE PRODUCT IS
HANDED OVER TO A THIRD PARTY, IT IS REQUIRED
THAT YOU HAND OVER THE INSTRUCTIONS
FOR THE SAFE USE, MAINTENANCE
AND PERFORMING AN INSPECTION OF THE MACHINE.

TABLE OF CONTENTS

DECLARATION OF CONFORMITY 4
WARRANTY TERMS AND CONDITIONS 5
1. TO THE BUYER - USER 6
2. DISPOSAL 6
3. SERVICING AND ORDERING OF SPARE PARTS 6
4. TECHNICAL INFORMATION AND DESCRIPTION OF THE MACHINE 7
4.1 Technical information – SAF 707 / 4 7
4.3 Technical information – SAF 707/5 8
4.4 Description of the machine 9
5. MARKING AND IDENTIFICATION 10
5.1 Picture with declaration on the machine and pictogram locations 10
5.2 Pictograms on the machine 11
6. WORKING, START, STOP 14
6.1 Tractor drive, models TT, STR and STR+EL 14
6.2 Tractor drive TT 15
6.3 Electric drive – STEL and STR+EL 15
7.4 Combine drive STR+EL 16
7.5 Scale on the pivoting table 17
7.6 Start 17
7. WORKING WITH SAF CIRCULAR SAW 18
8. MAINTENANCE 21
8.1 Strap transmission 21
8.2 Strap transmission 21
8.3 Angle transmission of the PTO drive; models TT, STR, and STR+EL 21
8.4 Hydraulic system 21
8.5 Change of oil in the hydraulic system 22
8.6 Maintenance of the oil filter – models STR, STEL and STR+EL 22
8.7 Other parts 22
8.8 Saw blade 22
8.9 Attaching the saw blade onto the spindle 23
8.10 Changing the saw blade 23
9. TRANSPORT 24
10. TROUBLESHOOTING 24
11. WEARING PARTS OF CIRCULAR SAW 24
12. HYDRAULIC AND ELECTRIC SCHEME 25
12.1 Hydraulic scheme LANCMAN SAF 707 TT 25
12.2 Hydraulic scheme LANCMAN SAF 707 STR, STEL, STR+EL, BRIGGS 26
12.3 Electric scheme for LANCMAN SAF 707 STEL 27
12.4 Electric scheme for LANCMAN SAF 707 STR+EL 28
13. PARTS OF THE CIRCULAR SAW 29

DECLARATION OF CONFORMITY

EC DECLARATION OF CONFORMITY OF THE MACHINE NO. 01/SAF 707

The producer GOMARK d.o.o., Čeplje 56, 3305 VRANSKO declares that the machine stated below has been planned and constructed in accordance with the EC directives listed in the table below. This statement does not apply to unauthorized changes to the machine.

CIRCULAR SAW WITH COVEYOR BELT
LANCMAN™ SAF 707

Type: TT, STR, STEL, STR+EL, BRIGGS, HND-STR

Serial number: on the plate of the machine.
Production date: on the plate of the machine.

The machine is made in compliance with requirements of the following regulations:

EC-DIRECTIVE	HARMONISED EUROPEAN STANDARDS
EC-MACHINE-DIRECTIVE 2006/42/EC	EN ISO 12100:2011
EC-LOW-VOLTAGE-DIRECTIVE 2006/95/EC	EN60204-1:2006/A1:2009
EC-ELECTROMAGNETIC COMPATIBILITY 2004/108/EC	EN 1870-6:2017

Acoustic power level for model PTO – Empty working/Working with wood	94/97 dB
Acoustic power level for model EL - Empty working/Working with wood	94/97 dB

The values shown in the table have been obtained by using electrical drive, keep in mind that real values are determined with the tractor emissions as well. The figures shown represent emission levels which do not necessarily reflect safe work levels. Even though there is a correlation between emission levels and exposure levels, this is not sufficient to determine whether further precautions are needed or not. The factors which influence the effective exposure level of the operator include the characteristics of the work environment, noise sources, etc. such as the number of machines and the carrying out of various procedures. In addition, the admissible exposure level may vary from country to country.
In any case, this information will give the user of the machine the opportunity to assess risks and dangers to a better extent.

Responsible for the technical documentation:

Gomark d.o.o.
ČEPLJE 56, SI-3305 Vransko

Čeplje, 03.01.2024

Person in charge:
Matjaž GOSAK

GOMARK
trgovina in proizvodnja, d.o.o.
Čeplje 52, SI-3305 VRANSKO

WARRANTY TERMS AND CONDITIONS

The warranty applies to machines and components - if used properly (as described in the user manual) they will work flawlessly.

Warranty period:

- **for home use: 24 months,**
- **for professional use: 12 months (industry).**

The warranty covers replacement of defective parts and repair work, but excludes transport fees. Warranty applies only with a correctly completed warranty certificate and receipt of purchase.

The warranty is voided if:
- failure to comply with the user's manual,
- if it is found that a pre-repair was carried out by an unauthorized person,
- if non-original spare parts were built in,
- if the product was used in an negligent manner,
- due to failures, made by mechanical blows caused by the buyer or a third person.

The warranty does not apply for expendable materials, stated in the instructions.

The warranty does not apply in the case of failure to comply with the user's manual which is an integral part of the machine. Warranty also does not apply in case of unauthorized repairs to the machine and changes of the machine.

Warranty repairs are carried out by the authorized service stated by your dealer or dealer who sold you the machine.

1. TO THE BUYER - USER

Dear buyer,
We thank you for the confidence you have shown us by buying our product. We are confident that you will be satisfied with it. Before you first use the machine carefully read and learn the instructions on the safe use and maintenance, description of the intended function, functionality and working environment of the machine. The instructions are designed to introduce all the required activities prior to the first use of the machine, maintenance and carrying out regular inspections.
In the event that you hand over the product to a third party, you also must hand over the instructions for safe use, maintenance and performance of regular inspections.
When reading the instructions, please pay special attention to the chapters and paragraphs, marked with the following symbol.

 **This symbol especially emphasizes the importance of that text in the specific chapter of the instructions.**

We reserve the right to design changes and make technical improvements.
Any partial or total reproduction of these instructions, text or images is a criminal act.

2. DISPOSAL

The mechanical SAW WITH CONVEYOR BELT, intended for transverse sawing only (without nails, screws etc.), has a maximum length of 100 cm. The diameter of the wood must be at least 5 cm and 35 cm at the most. Irrespective of the diameter of the wood you may not put more than 1 piece of wood on the cantilever table at a time.
Any other use is considered improper. The damage caused by improper use is the RESPONSIBILITY OF THE USER ONLY.
Wood for sawing must be stored near the usual working place of the user of the machine
The user must consider security, working and maintenance instructions as well as dimensions stated under technical data. It is prohibited to saw wood without the cantilever table
The machine may be used, handled and repaired only by a person who is familiar with the machine and hazards. The right position for sawing is always directly behind the handle of the cantilever table. In other positions the user bears the risk!
At every working procedure the cantilever table should be placed in the starting position.

 **Any deviation from the prescribed use is considered ineligible, and the manufacturer is not liable for security and functionality.**

 **Any remodeling and replacement of the original components of the CIRCULAR SAW AND THE CONVEYOR BELT eliminates the warranty of the manufacturer for safety and functionality of the machine.**

The machine may be used, handled and repaired only by adults (at least 18 years old), familiar with the instructions.

3. SERVICING AND ORDERING OF SPARE PARTS

Servicing and elimination of defects within the warranty period and afterwards will be performed direct by your dealer.
For any help you can always turn to the producer:

GOMARK d.o.o.
ČEPLJE 56, SI-3305 Vransko, Slovenia
Phone: +386 3700 15 03

When ordering spare parts always indicate the following data:
- name of the machine,
- indication of the machine-type,
- serial number of the machine,
- year of manufacture of the machine.

All information for the ordering of the spare parts are written on the plate or. permanent label on the machine.

4. TECHNICAL INFORMATION AND DESCRIPTION OF THE MACHINE

4.1 Technical information – SAF 707 / 4

CIRCULAR SAW	***SAF 707 TT/4***	***SAF 707 STR/4***	***SAF 707 STEL/4***	***SAF 707 STR+EL/4***	***SAF 707 BRIGGS/ HND /4***
DIMENSIONS (H×W×L)	2400/4200×1550×1700 mm				
SAW BLADE DIAMETER:	700 mm				
SUITABLE SAW BLADE (Ø):	700 mm/axle 30 mm				
RECOMMENDED THICKNESS OF THE SAW BLADE:	4.2/4.5 mm	4.2/4.5 mm	4.2/4.5 mm	4.2/4.5 mm	4.2/4.5 mm
REVOLUTIONS ON THE SAW BLADE:	1741 rpm @ 350 rpm on PTO	1741 rpm @ 350 rpm on PTO	1728 RPM @ 1350 RPM on electric motor	1750/1728	1600 rpm @ 3600 rpm on GASOLINE ENGINE
Transmission number:	1:4,98	1:4,98	1:1.28	1:4.98 1:1.28	
Weight:	540 kg	580 kg	595 kg	605 kg	620 kg
	Drive:				
Drive/connector category:	Tractor/cat. I/II	traktor/cat. I/II	5 POL/16 A/ cat. I/II	Tractor cat. I/II + ELECTRIC/ 5-POL/16 A //	GASOLINE ENGINE/ cat. I/II
Energy use P1:	12 kW/190 bar	12 kW	400V/ 7.5Kw	12kW// 400V/ 7.5Kw	7,7 kW/3600 obr.
MAX revolutions:	400 rpm	400 rpm	1440 rpm	400 rpm / 1440 rpm	3600 rpm
Hydraulic oil	---	SVG 32/14.5 Ltr.	SVG 32/14.5 Ltr.	SVG 32/14.5 Ltr.	SVG 32/14.5 Ltr.
Max. pressure in the system	190 bar	190 bar	190 bar	190 bar	190 bar
Drive type:	PTO shaft/drive of the saw blade using strap/hydraulic using high-speed connectors	PTO shaft/ drive of the saw blade using strap/hydraulic using pump with its own oil tank	Electro-motor drive of the saw blade using strap/hydraulic using pump with its own oil tank	PTO shaft/ Electro-motor drive of the saw blade using strap/hydraulic using pump with its own oil tank	Gasoline engine drive of the saw blade suing strap/hydraulic using pump with its own oil tank
Angle transmitter/ multiplier:	ANGLE TRANSMISSION / oil SAE 90, 0.6 l	ANGLE TRANSMISSION / oil SAE 90, 0.6 l	--	ANGLE TRANSMISSION / oil SAE 90, 0.6 l	--
Suction filter:	60MIC 1'' FI100X143	60MIC 1'' FI100X143	60MIC 1'' FI100X143	60MIC 1'' FI100X143	60MIC 1'' FI100X143
Belt transmission-belts:	2 pc. 13×1475	2 pc. 13×1475	2 pc. 13×1075	2 pc. 13×1.475 2 pc. 13×1.1075	4 pc 13×1.125
Hydraulic pump – drive:	--	2 pc 12.5×800	2 pc 12.5×800	2 pc 12.5×800	2 pc 12.5×800
	Data for operation / Cutting height				
Min. thickness of the wood:	5 cm				
Max. thickness of the wood:	24 cm				
	Conveyor belt				
Length in working position	400 cm/42 cm				
Drive of the conveyor belt	Hydraulic motor				
Drive of the telescope/tilting operation	Telescopic hydraulic cylinder/hydraulic cylinder				

4.3 Technical information – SAF 707/5

CIRCULAR SAW	*SAF 707 TT/5*	*SAF 707 STR/5*	*SAF 707 STEL/5*	*SAF 707 STR+EL/5*	*SAF 707 BRIGGS/ HND /5*
DIMENSIONS (H×W×L)	2600/5200×1550×1700 mm				
SAW BLADE DIAMETER:	700 mm				
SUITABLE SAW BLADE (Ø):	700 mm/axle 30 mm				
RECOMMENDED THICKNESS OF THE SAW BLADE:	4.2/4.5 mm	4.2/4.5 mm	4.2/4.5 mm	4.2/4.5 mm	4.2/4.5 mm
REVOLUTIONS ON THE SAW BLADE:	1741 rpm @ 350 rpm on PTO	1741 rpm @ 350 rpm on PTO	1728 RPM @ 1350 RPM on electric motor	1750/1728	1600 rpm @ 3600 rpm on GASOLINE ENGINE
Transmission number:	1:4,98	1:4,98	1:1.28	1:4.98 1:1.28	
Weight:	565 kg	605 kg	630 kg	640 kg	655 kg
	Drive:				
Drive/connector category:	Tractor/cat. I/II	traktor/cat. I/II	5 POL/16 A/ cat. I/II	Tractor cat. I/II + ELECTRIC/ 5-POL/16 A //	GASOLINE ENGINE/ cat. I/II
Energy use P1:	12 kW/190 bar	12 kW	400V/ 7.5Kw	12kW// 400V/ 7.5Kw	7,7 kW/3600 obr.
MAX revolutions:	400 rpm	400 rpm	1440 rpm	400 rpm / 1440 rpm	3600 rpm
Hydraulic oil	---	SVG 32/14.5 Ltr.	SVG 32/14.5 Ltr.	SVG 32/14.5 Ltr.	SVG 32/14.5 Ltr.
Max. pressure in the system	190 bar	190 bar	190 bar	190 bar	190 bar
Drive type:	PTO shaft/drive of the saw blade using strap/hydraulic using high-speed connectors	PTO shaft/ drive of the saw blade using strap/hydraulic using pump with its own oil tank	Electro-motor drive of the saw blade using strap/hydraulic using pump with its own oil tank	PTO shaft/ Electro-motor drive of the saw blade using strap/hydraulic using pump with its own oil tank	Gasoline engine drive of the saw blade suing strap/hydraulic using pump with its own oil tank
Angle transmitter/ multiplier:	ANGLE TRANSMISSION / oil SAE 90, 0.6 l	ANGLE TRANSMISSION / oil SAE 90, 0.6 l	--	ANGLE TRANSMISSION / oil SAE 90, 0.6 l	--
Suction filter:	60MIC 1'' FI100X143	60MIC 1'' FI100X143	60MIC 1'' FI100X143	60MIC 1'' FI100X143	60MIC 1'' FI100X143
Belt transmission-belts:	2 pc. 13×1475	2 pc. 13×1475	2 pc. 13×1075	2 pc. 13×1.475 2 pc. 13×1.1075	4 pc 13×1.125
Hydraulic pump – drive:	--	2 pc 12.5×800	2 pc 12.5×800	2 pc 12.5×800	2 pc 12.5×800
	Data for operation / Cutting height				
Min. thickness of the wood:	5 cm				
Max. thickness of the wood:	24 cm				
	Conveyor belt				
Length in working position	500 cm/42 cm				
Drive of the conveyor belt	Hydraulic motor				
Drive of the telescope/tilting operation	Telescopic hydraulic cylinder/hydraulic cylinder				

4.4 Description of the machine

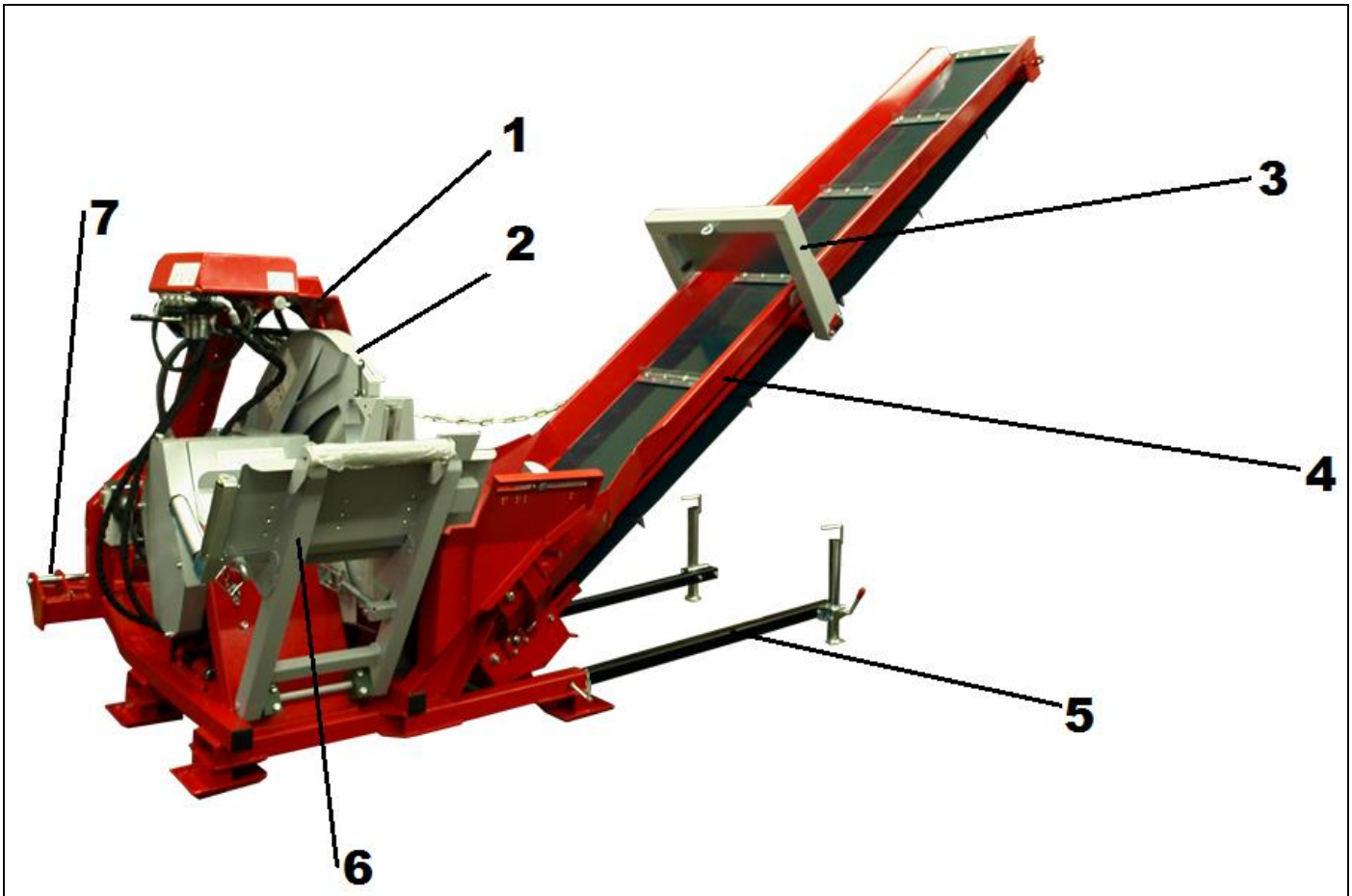

1- SUPPORTING FRAME OF THE SAW WITH A BELT
2 – PROTECTIVE COVER OF THE SAW BLADE
3 – SAFETY VALVE
4 – TELESCOPIC CONVEYOR BELT
5 – SUPPORT FEET
6 – PIVOTING TABLE
7 - 3T TRACTOR SHAFT

The circular saw has a strong metal carrier frame, cantilever table, protective cover of the saw blade, conveyor belt and hydraulics.

The saw includes the following wrenches for securing the saw blade (assembly/disassembly of the saw blade):

A-wrench size 48, B- wrench size 30



5. MARKING AND IDENTIFICATION

5.1 Picture with declaration on the machine and pictogram locations

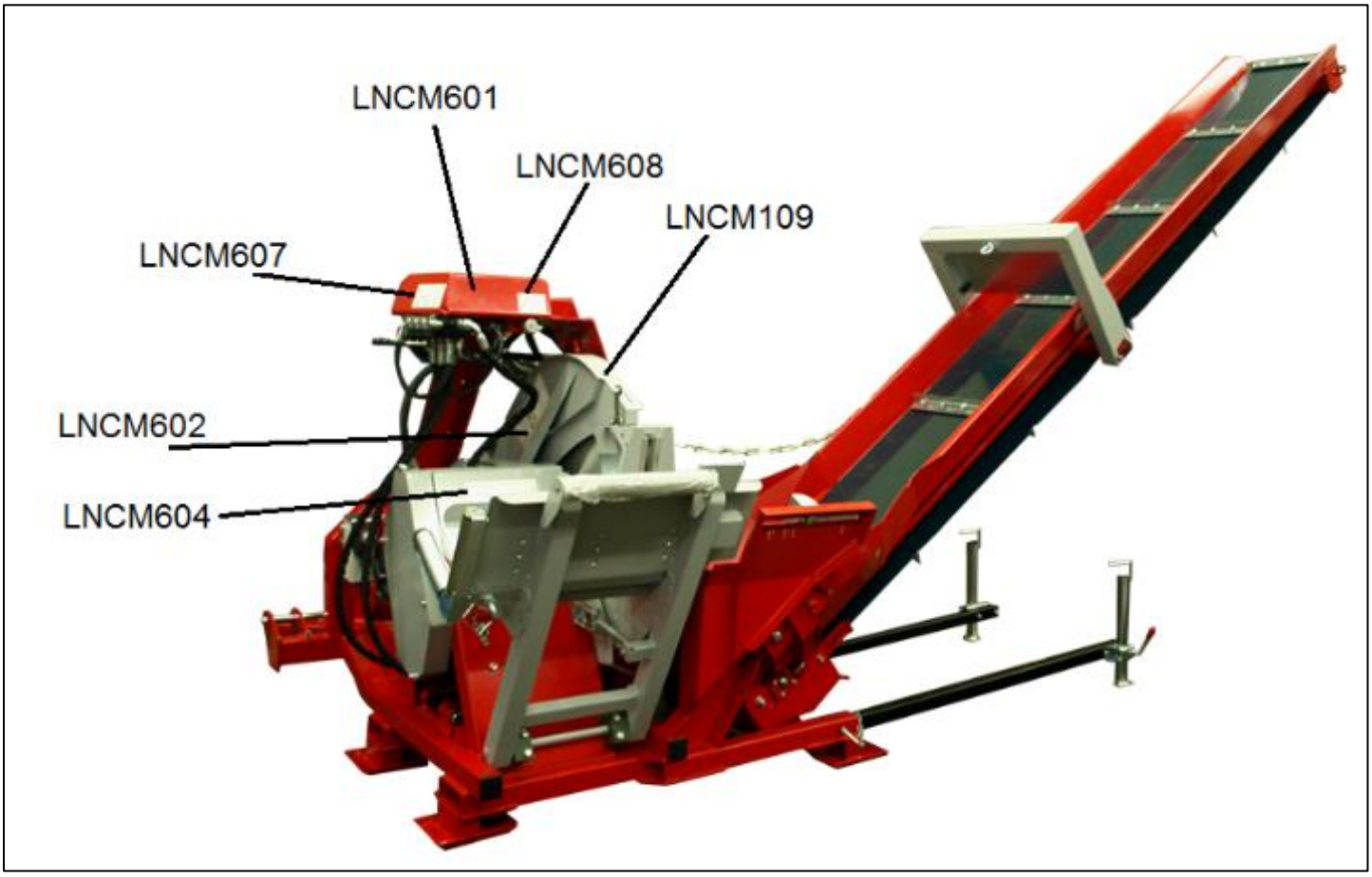

5.2 Pictograms on the machine

Warning signs, placed on the circular saw, are warning the workers of the dangers which may occur when using the circular saw (each pictogram is placed once only).

DECL.		**IDENTIFICATION DATA OF THE MACHINE – PRODUCERS PLATE**
LNCM601	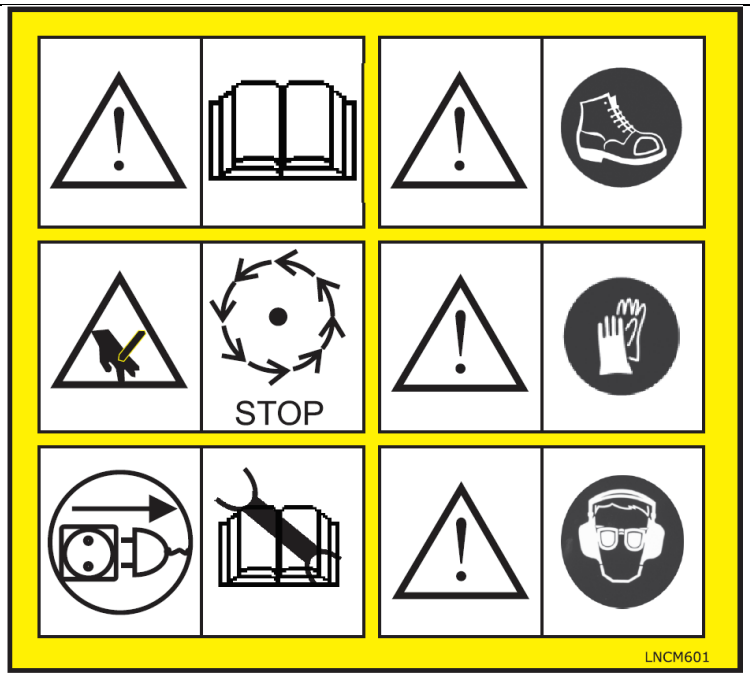	**PLEASE CAREFULLY READ THE USER'S MANUAL BEFORE USING THE MACHINE.** **RISK OF INJURY – CUTS DUE TO THE ROTATING CUTTING TOOLS.** **ATTENTION! BEFORE MAINTENANCE, SETTING AND CLEANING PULL OUT THE MAIN PLUG (700 EL) OR REMOVE THE PTO SHAFT (700 C)!** **OBLIGATORY USE OF SAFETY SHOES** **OBLIGATORY USE OF PROTECTIVE GLOVES AND PROTECTIVE CLOTHES.** **OBLIGATORY USE OF PROTECTIVE GLASSES AND HEARING PROTECTION**
LNCM605		**Mandatory rotation direction of the PTO axle.** **Max. 400 rpm on the PTO axle.** **When connecting the PTO shaft, make sure that the protective PTO cap covers the PTO joints.** **DANGER OF CAPTURE!** *** PLACED ON THE MODELS WITH A PTO DRIVE.**
LNCM109		**RIGHT ROTATION DIRECTION OF THE SAW BLADE!**

LNCM613	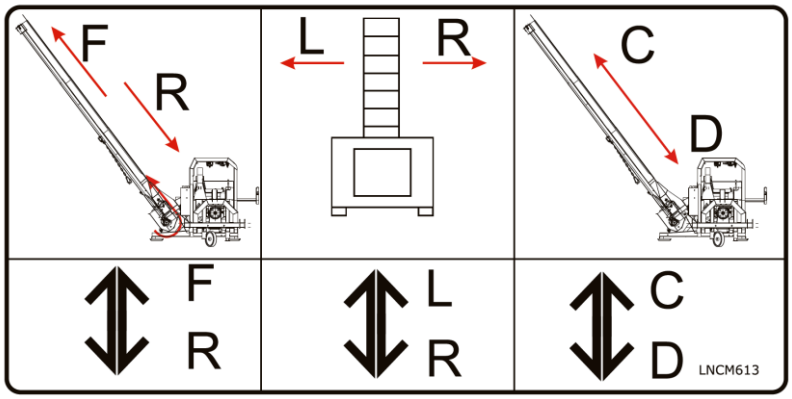	**FUNCTIONS FROM LEFT TO RIGHT** **TURN ON/OFF THE DRIVE OF THE CONVEYOR BELT** **HYDRAULIC POSITIONING OF CONVEYOR BELT LEFT/RIGHT (USE ONLY WHEN THE BELT IS STRETCHED)** **APART/TOGETHER INSTALLATION OF THE CONVEYOR BELT INTO WORKING POSITION/TRANSPORT POSITION.**
LNCM608	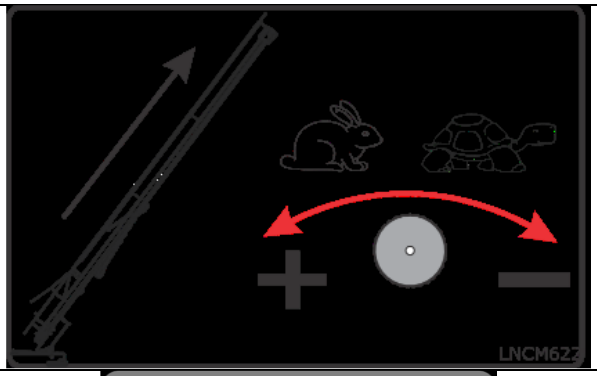	**REGULATION OF OIL FLOW/ REGULATING THE SPEED OF THE CONVEYOR BELT**
LNCM602	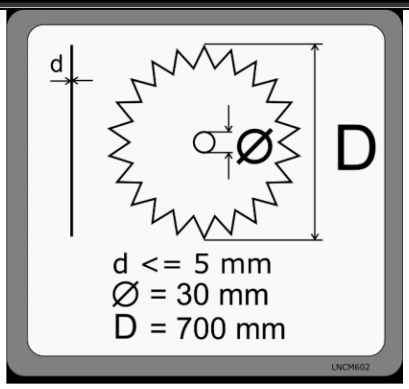	**SIZE OF THE SAW BLADE** **d – WIDTH OF THE SAW BLADE** **Ø – WIDTH OF THE AXLE/DIAMETER OF THE AXLE** **D – DIAMETER OF THE SAW BLADE**
LNCM604	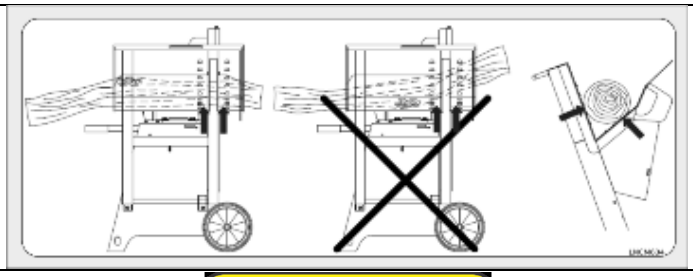	**PROPER USE OF THE SAW OR HOW WOOD SHOULD BE PLACED ON THE WORKING TABLE.**
LNCM167	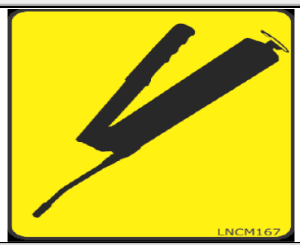	**GRASSING POINTS AT THE MACHINE**
LNCM106	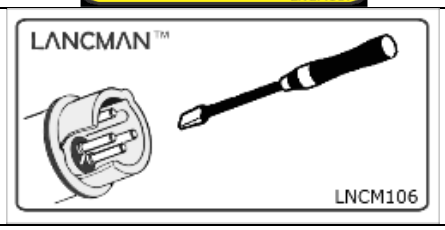	**SETTING THE DIRECTION OF THE MOTOR ON THE CIRCULAR SAW.** *** PLACED ON THE SAW WITH AN ELECTRO-ENGINE ONLY.**

LNCM603	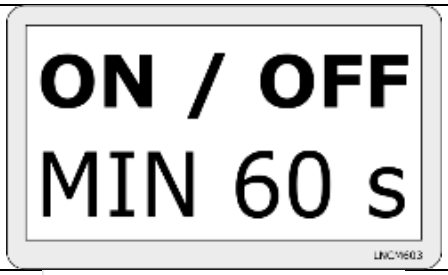	**MINIMUM PAUSE AFTER THE ENGINE HAS STOPPED AND BEFORE YOU CAN TURN THE ENGINE ON AGAIN.** *** PLACED ON THE SAW WITH AN ELECTRO-ENGINE ONLY.**
LNCM110	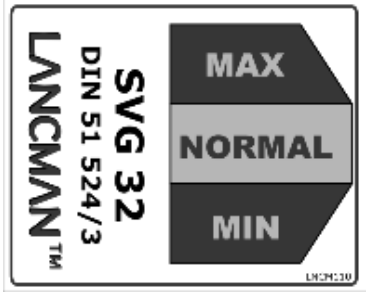	**OIL CONTENT IN THE TANK THE CONTENT SHOULD ALWAYS BE BETWEEN MIN AND MAX MARK!**
LNCM108		**OIL CHANGE. (CHANGE THE OIL EVERY 500 WORKING HOURS OR AT LEAST EVERY 24 MONTHS!)**
LNCM606		**NOISE LEVEL**

6. WORKING, START, STOP

6.1 Tractor drive, models TT, STR and STR+EL

Plug in the saw to a three-point connection of the tractor. The connection of the saw meets the category stated under the technical data.

Firstly, plug in the saw to a three-point connection of the tractor.

When approaching the tractor to the saw, please make sure no one is between the saw and the tractor. Risk of capture! In the area of the lifting of the hydraulic system of the tractor there is a danger of injuries in form of crushing and pressing. All pins should be secured by spring pins (everything included!).

The arms of the tractor hydraulics must be firmly attached so that the machine is tightly attached and does not sway. To ensure a safe stability, there must be at least 20% of the tractor weight together with the machine on the front tractor axle.

Make sure that the carrying capacity of the rear wheels is appropriate (check the technical data in the user's manual for the tractor).

Before you connect the machine to the tractor, please read the user's manual for the tractor.

Plug in the PTO shaft and secure it with a safety chain.
PTO shaft on the pump of the log splitter meets standards of the PTO shaft with 6 cogwheels.

The PTO shaft must be CE-marked, properly protected and must have a chain to lock it. Carefully read the user manual for the PTO shaft and connect it as described by the manufacturer of the PTO shaft. Make sure that all protective equipment on the PTO shaft and a plastic cap (protection) on the splitter are covered at least 50 mm.

Make sure that the direction of rotation of the tractor PTO shaft is correct (picture)!

The PTO shaft shall not be too long! A too long PTO shaft may cause damage. A too long shaft may damage the angular transfer of the saw. In such case the warranty is voided.



Connect the quick couplers.
Set the revolutions in the tractor to minimum.
Slowly turn on the tractor PTO shaft and the circular saw.
Set the desired rotational speed of the PTO shaft on the tractor.

The maximum rotation speed of the PTO shaft: 400 rpm

The maximum rotation speed of the PTO shaft is an important piece of information. The speed should not be exceeded under any circumstances, because it may result in damage to the saw blade.
Check the maximum number of revolutions on the saw blade. Never exceed the maximum number of revolutions!

Do not use a PTO shaft with clutch!
The drive of the saw with operates only via the PTO shaft of the tractor in both models.



The machine is equipped with an EMERGENCY STOP SYSTEM – CLUTCH WITH BRAKE. In an emergency, to stop the machine, just press the RED button and the machine will stop in max. 8 seconds!

To put the machine back into operation, you must pull the lever back until you insert the lever.

The clutch and brake system are included in the standard equipment of the model 707 STR, 707 STR+EL and 707 Briggs/Honda.

⚠ **Attention! After the emergency shutdown, the tractor drive must be switched off within 30 seconds. If the vehicle is left idling for a longer period, the V-belts may burn.**

6.2 Tractor drive TT

First connect the machine and the PTO shaft, as described in section 6.1.
Then connect the hydraulic quick couplers. Turning on and operating all the hydraulic functions of the saw with belt runs via hydraulic valves as described below in section 6.4.

6.3 Electric drive – STEL and STR+EL

The machine uses a three-phase 400 V.
Therefore, before any new connection or change of location it is necessary to check the direction of rotation; if necessary, polarity should be changed (switch the combination: switch - plug - phase transmission).

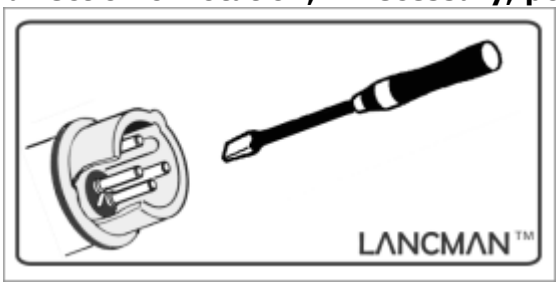

The direction of rotation is correct if the teeth on the saw blade rotate towards the working side (see pictogram on the protection of the saw blade). If the direction of rotation is incorrect, it is necessary to change the direction, so that the two poles of the phase transmission (black) in the plug change using a phase inverter –(a screw) by gently pushing it and turning it 180 °. Check the arrow - the direction of rotation.

⚠ **Check the direction of rotation!!**

⚠ **When checking the direction of engine rotation, let the engine run for the shortest time possible!**



Work on the electrical equipment must be carried out by trained personnel only!
Warning: This device may only be connected to the electricity supply network with an electrical impedance of less than or equal to Z_{Max} = 0.39 Ohm. In case you do not know the network impedance, please consult your supplier of electricity.

The machine may work only through a network protected by a protective switch of fault current <30mA.

⚠ **Before you plug in the saw, please check if the power and voltage are proper. Carefully read the plate on the electromotor and on the circular saw. The line voltage must be at 400 V/50 Hz.**

The circular saw is equipped with a heat relay which stops the engine if overheated.

Mains cables and extended electric conductors must contain 5 wires (3P+N+Z) or 3 wires (1P+N+Z), depending on the model and the power of the connection (see the table with the technical data). Connection to the mains - only via plug with a protective contact 5-pole 400V with a 16A fuse.

⚠ **In order to prevent overheating of the engine, use a right electric conductor (min. thickness 2.5 mm (0.098 inch)/max. length 15 m (49.2 feet). Do not use a rolled cable.**

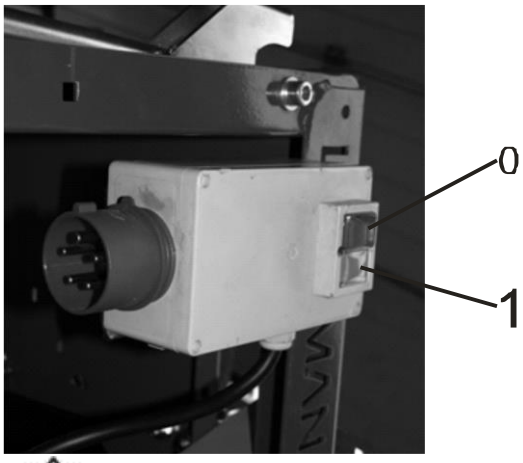

The saw is equipped with an electronic brake. If the green button (see picture) pops out as soon as the motor is turned on, it means it has not sufficiently cooled. **Never hold the power button!**
After switching off the engine, the saw blade stops after about 10 seconds. During braking and for a little time after it stops, the machine hums. In this phase, never turn the switch on or off. You may switch on the engine for 1 minute after the sound dies down.

START (1): press the green key
STOP (0): press the red button

⚠ **BEFORE CARRYING OUT MAINTENANCE AND INSPECTIONS PULL THE ELECTRIC PLUG OUT (DISCONNECT IT FROM THE POWER NETWORK)!**

Due to inflexible plug connections the CEE plug may get ripped from the chassis of the switches. Use a coating or sprays to protect the plastic.
For such damage the warranty is voided.

Caution: In the event of a machine brake failure the circular saw should not be used! In case of danger, for example entrapped piece of wood, immediately press the EMERGENCY STOP button! Otherwise, the motor will overload.

⚠ **Make sure that the power is grounded and that the saw is connected to a voltage with a differential switch**.

When using a circular saw, make sure that no additional electricity consumers are connected to the same circuit as this, in the given circumstances may initiate the fuse.
In case of overheating due to machine overload, it turns off automatically via the built-in overload switch. The engine may be switched on again only after it has cooled down to a surface temperature of about 30 ° C.

The engine and switch should not be cleaned with a jet of water, high-pressure cleaner or similar devices! There is a risk of electric shock and destruction.

In addition, it is prohibited to use the saw outdoors in wet weather! There is a danger of electric shock!

7.4 Combine drive STR+EL

By the combine drive, must be carried out, that only one drive can be operated at one time.
The machine SAF has this solution, that when the PTO is connected to the SAF, electric switch cannot start because, there is an interrupting switch covering machine PTO with small doors. When the doors are closed, interrupting switch is on, and the electric switch can start the electric motor.



7.5 Scale on the pivoting table

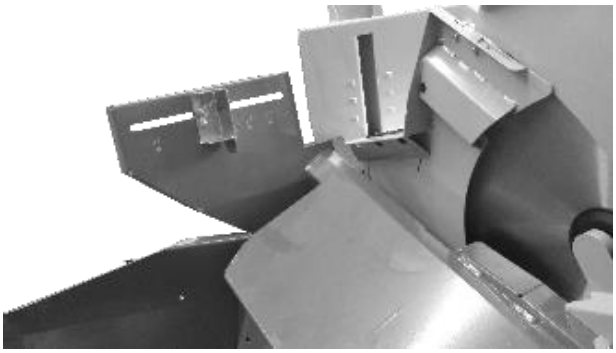

The saw has a built-in scale with an ejection chute for firewood. The measuring device allows for setting the length of the firewood to be cut, as per requirement, up to a maximum length of 50 cm.
The scale is not calibrated by an authorized organization.

7.6 Start



First place the conveyor belt to working position.
First it is necessary to set up the stabilizing feet, so that the belt is stable and there is no risk of tipping. Pull the telescopic legs out and place them at the far outer edges. This will stabilize the conveyor belt even when the entire belt is pulled out.

Then stretch the conveyor belt with the help of hydraulics, from transport to working position. See the figure below, command lever on the right - the right pictogram.

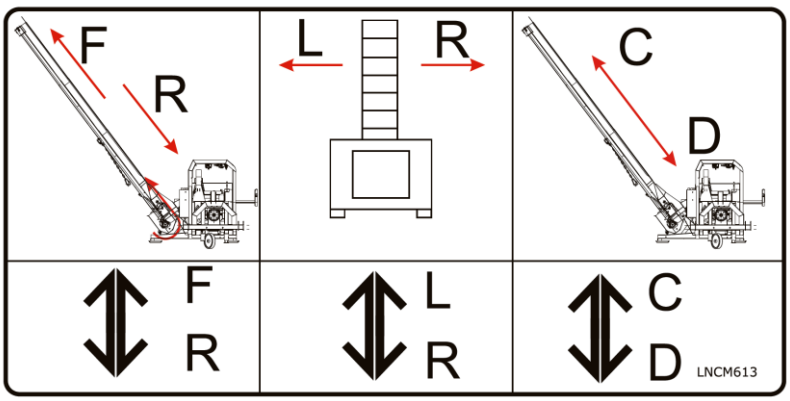

FUNCTIONS FROM LEFT TO RIGHT

TURN ON/OFF THE DRIVE OF THE CONVEYOR BELT

HYDRAULIC POSITIONING OF CONVEYOR BELT LEFT/RIGHT (USE ONLY WHEN THE BELT IS STRETCHED)

APART/TOGETHER INSTALLATION OF THE CONVEYOR BELT INTO WORKING POSITION/TRANSPORT POSITION.
ONLY FOR MODEL SAF III

At the same time, ensure that the belt leans properly, so that when stretching, the conveyor belt cannot get stuck! The belt can be damaged and tear down!

The inclination of the belt is regulated by an interim handle - see image above, pictogram in the middle.
When the belt is tightened, visually check if everything is safe to continue working.
Also do a test run of the conveyor belt. If problems occur, immediately stop the operation and check where the problem has occurred (capture of a belt, plate) and solve the problem.

The machine also has the possibility for regulating the speed of the conveyor belt.
Next to the pictogram (figure on the right), there is an oil flow regulator for speed regulation.

To start the saw blade for models TT and TP, turn on the tractor drive - through the PTO shaft. The saw is turned on/off by means of the tractor. Before starting work check the direction of rotation of the saw blade. See the glued arrow on the protection of the blade – this indicates the direction of rotation.

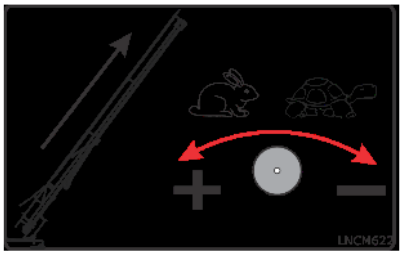

To start operating the saw blade, model STR, it is necessary to start the PTO shaft using the on / off system of the drive on the tractor.
The saw blade itself will not be rotating. It is necessary to switch it to 'on' located on the handle lever of the hydraulic valve, which is next to the pictogram on the right side.
To start the saw blade push the handle to the ON position. First, allow the saw blade to run for a short time in order to check the direction of rotation of the saw blade and then turn it off.

When you've finished assembling the belt, check the operation of the belt and the saw blade. Then you can start working.

7. WORKING WITH SAF CIRCULAR SAW

The saw with a conveyor belt is intended for use by one person at a time. The machine should never be used by two people at the same time! Failure to comply with the instructions for use or directions can lead to injuries and may even be fatal to the operator.

⚠ **Provide safety instructions to all persons working on the machine!!**

It is important that all users are properly trained on the use, configuration, and operation of the cantilever circular saw. The user must be aware of the factors that influence noise exposure (such as saw blades that are designed specifically to reduce emitted noise, as well as the maintenance of the saw blade and cantilever circular saws).

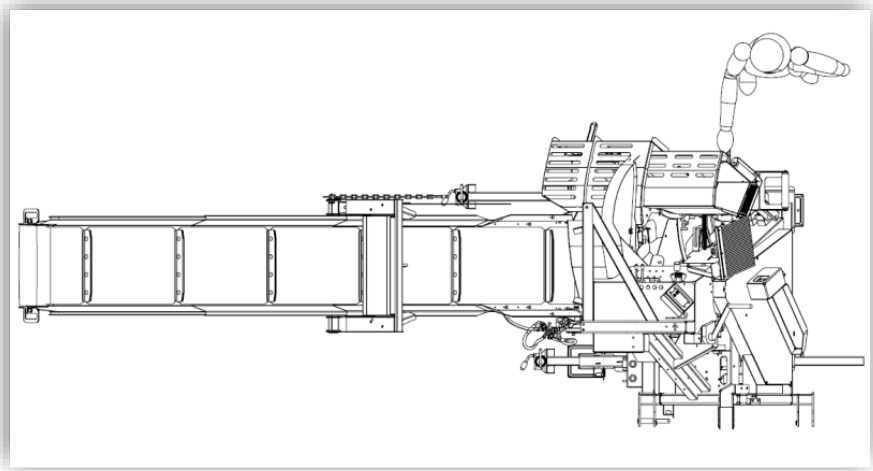

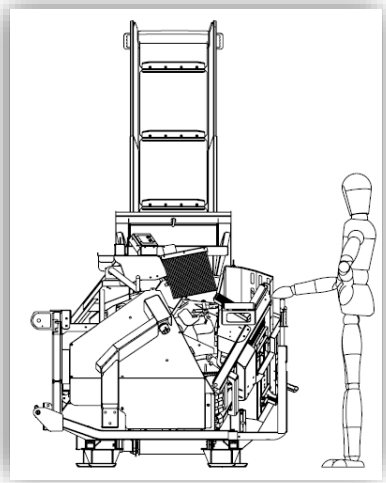

In addition, the user must be informed about the factors that affect dust explosion. The user must be familiar with the type of material that can be sawed. It is also important that the user knows where dust is ejected and where other waste is located, so that they can take the necessary action (vacuum cleaner placed at the site of ejection) and a dedicated setting of the suction covers, deflectors and catcher for chips.

⚠ **When working wear safety goggles, respiratory protection, safety shoes, hearing protection and close-fitting clothes!** Also remove jewellery, rings and watches.

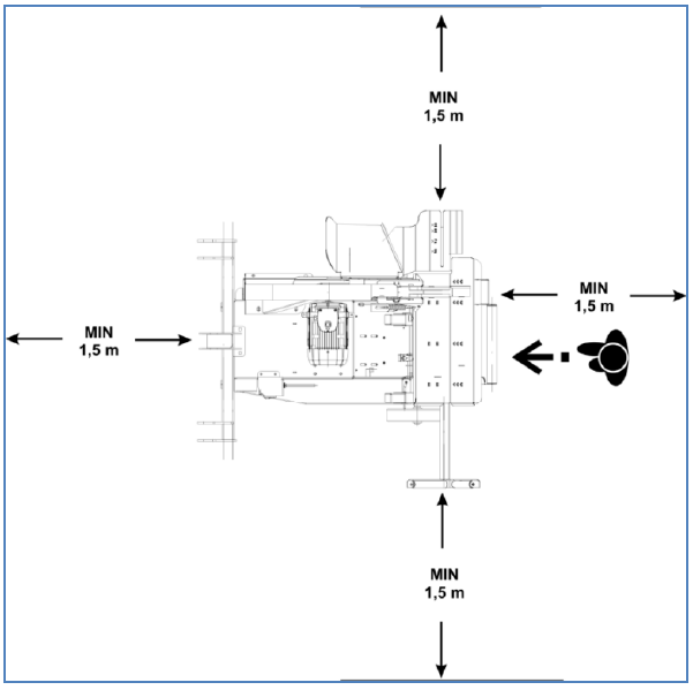

Make sure that the machine is placed on a flat surface with a solid base and is stable. This means that the surface is non-skid, vibration-free and stable. Make sure that the floor around the machine is free of waste, such as wood chips and cut pieces. All protective and safety devices must be mounted on the saw.
It is also necessary to provide adequate lighting.
Before starting the machine, perform verification functions.
After the first 3 hours of operation tighten all the nuts and bolts, and then after every 25 hours of operation.
Check the electrical connection cables and do not use damaged extension cords. Make sure that children do not approach the device that is connected to the network. The person who operates the machine must be at least 18 years old. Apprentices must be at least 16 years old, and can only work under supervision (Attention! Comply with your national regulations.). The operator should be focused when using the machine and shall not let anyone disturb him/her.

Since the saw is not equipped with a device for the extraction of dust, it may be used only outdoors and not in enclosed spaces. Otherwise it is necessary to install a suction device, which conforms to EN 12779:2004 standards, to the circular saw. Pay attention to the life span of the saw-blade.
Always maintain a clean working environment. In the working place there should be no wood waste and other parts lying around.
Use only sharpened saw blades with no cracks and other deformities (bent saw blade is not suitable) should be installed.

⚠ **Do not remove or change in any way the safety parts of the machine (switch with an electric brake, protective cover of the saw blade)!**

⚠ **Never leave the machine unattended during operation!**

⚠ **Before each use, check the condition of the circular saw and particularly the condition of the protective cover and the condition of the saw blade! In case of damage, call customer service or replace the saw blade with a new one! Do not operate the saw blade until the defects are corrected.**

In case of troubleshooting or removing trapped wooden pieces, shut down the machine. In order to do this, press the 0 key and pull out the plug (in case of an electric saw) or stop the tractor and disconnect the PTO shaft (PTO-driven saw)!

⚠ **Be careful at work: there is a risk of injury to fingers and hands from the rotating cutting tool.**

Wooden splits and sawdust should be promptly removed from the machine in accordance with the requirements, so that they do not impede safety in the workplace. There should be open space for the

discharge of sawdust. When there is a large pile of sawdust under the blade, remove it, as otherwise the teeth of the saw blade will throw back the sawdust. The sawdust in the vicinity of the saw blade should not be removed by hand.

⚠ **During operation, never reach into the vicinity of the saw blade. In case there is a need to remove any part of the cut wood or wooden splits, make sure that the machine is at a standstill.**

When sawing curved wood, the curved side must be directed towards the slot in the saw blade in order to prevent tipping over and jamming the wood during sawing. When pressing the cantilever table hard towards the saw blade, the motor is also heavily loaded. Therefore, the wood may jam in the saw blade (risk of motor overload!).
Installations, repairs and maintenance of electrical installations may be performed only by experts.
When leaving the workplace switch off the engine - **pull out the plug!**
Only saw blades that are made in accordance with the standard
EN 847-1:2005+A1:2007 may be used.

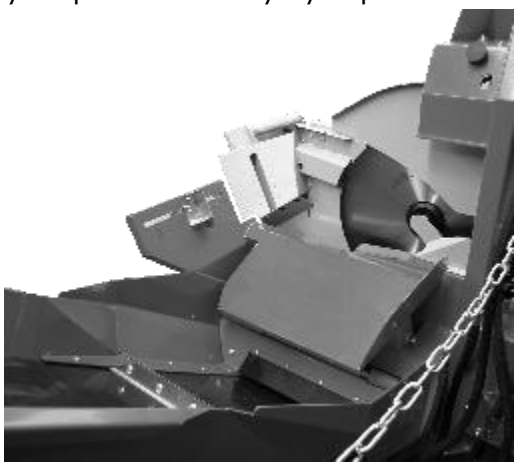

⚠ **In order to prevent fire, it is necessary to clean and maintain the machine and regularly remove wood chips and dust.**

⚠ **Be careful when working with a conveyor belt! During operation you should bear in mind that parts of wood may freely fall from the belt. It is dangerous and should not be allowed to stay in the vicinity of the belt.**

⚠ **During operation, never reach into the funnel area of the conveyor belt! In case it is necessary to clean the wooden splits and other wooden parts you should first stop the drive of the saw blade and stop the belt. Then you may clean the belt and remove any foreign objects!**

⚠ **The saw with a conveyor belt can only be used outdoors!**

8. MAINTENANCE

8.1 Strap transmission

You must test the brake periodically (every 2 months or every 100 hours - whichever comes first). First you must let the saw run and press the red EMERGENCY STOP button. The machine must stop for a maximum of 10 seconds. If this is the case, you can continue to use the machine. If not, the clutch must be repaired by a representative service!

8.2 Strap transmission

Every 100 hours, lubricate the bearings of the main axis of the saw with grease.



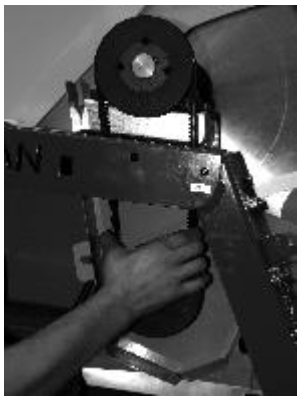



Every 100 hours, check the tension of the strap. Hold the strap with your hand. It should have less than 30 mm of play (+/- 15 mm from the primary axis). See image on the left.

8.3 Angle transmission of the PTO drive; models TT, STR, and STR+EL

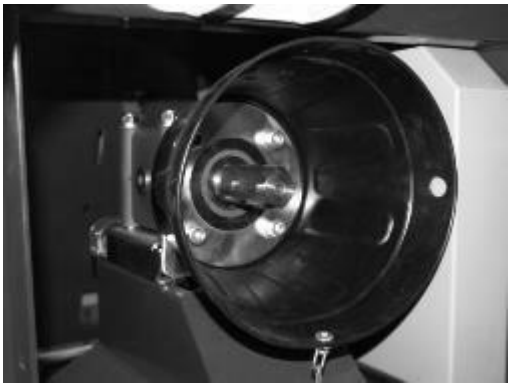

Change oil after the first 250 working hours in the drive / angle transmission of the saw. Use oil SAE 90. Further oil changes should follow 1.000 working hours or once every five years. With time the oil loses its viscosity and lubrication is worse. Used oil should be disposed of in the appropriate waste in a special landfill. Oil waste does not belong in municipal waste.

8.4 Hydraulic system

- Before every use, check the condition of the hydraulic installation (hose). Pay special attention to possible mechanical damage. A damaged hydraulic hose can burst under high pressure and oil can squirt out. This is very dangerous!
- Maximum oil level is reached when the lens for the oil level is full.
- When the oil level reaches 60 % on the scale, the minimum oil level is reached.
- If this is the case, add enough oil immediately.
- To add oil, unwind the lid of the filling part und use a suitable funnel.

8.5 Change of oil in the hydraulic system

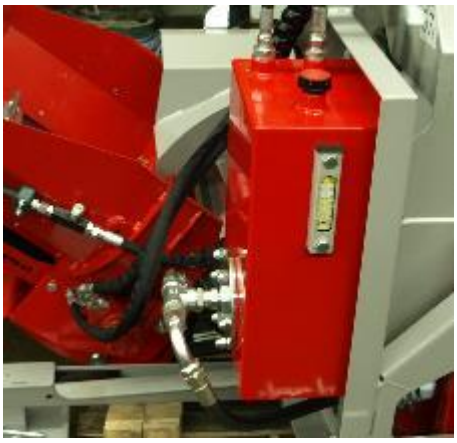

Warning! Used oil must be removed in accordance with environmental regulations. Read and consider valid environmental regulations. *Note*: Before the change, the conveyor belt must be in the transport position (folded up).

First change of oil must be done after 250 hours of work on the conveyor belt. The next change must follow every 1.000 hours of work on the or at least once in 24 months.

1. Unwind the lid on the tank.
2. Prepare a container for approx. 20 l of waste oil and place it under the tap on the bottom of the tank. Unwind the magnet tap on the bottom of the tank and clean it before adding new oil.

3. Remove the used oil. Insert the tap on the bottom of the tank and seal it with a sealing compound. Add new oil to the tank. The oil must be of suitable quality described under item 4. **For the amount see the technical data on the saw**. You should reach the maximum point on the oil scale.

8.6 Maintenance of the oil filter – models STR, STEL and STR+EL

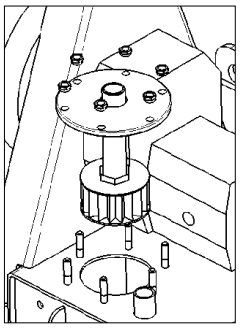

Check the oil filter and change it when you change oil. You may find aluminium scrapings that originate from the pump operation.
Change the filter after first oil change and later every 1.000 working hours or sooner if you find a mechanical damage or holes.

8.7 Other parts

Lightly lubricate the joint parts of the circular saw, if necessary.

8.8 Saw blade

The operator must select only the saw blades, with a suitable diameter and thickness for the machine according to the model type. It's described in the technical data of the machine.
Only saw blades that are made in accordance with the standard EN 847-1:2005+A1:2007 may be used.
Check that the saw blade can operate at a max 2000 revolutions/minute! *Consider the maximum speed of the saw blade!*

CAUTION:
The diameter of the saw blade may decrease due to grinding by 5% at the most!
Before each use, check the saw blade. Use only well sharpened saw blades and saw blades with teeth spread out evenly.
A well-sharpened blade increases the working capacity and reduces the risk of kickback. Bad or blunt saw blades mean a lot of power consumption and may lead to motor overload.

If the blade is not sharp enough, it can quickly overheat. Timely replacement with a sharpened saw blade is recommended. Due to overheating, cracks can occur in the saw blade. Cracked saw blades must be replaced.

Protect the saw blade against rust with a little grease or oil.

Saw blades on the machine are made of hard metal with 42 teeth. The wood must have NO nails or other hard objects. When sawing parts of the veneer the saw blade can break off or the teeth of the saw may be damaged in some other way.

The saw blade is not designed for such use. Failure to observe this instruction, will nullify the warranty claims!

8.9 Attaching the saw blade onto the spindle

To attach the saw blade always use the original flange of the saw (as required by the manufacturer)!
If the diameter of the spindle is smaller than the diameter of the bore of the saw blade, it is necessary to compensate for the difference using flanged sleeves, as required by the manufacturer. Loose interim rings or sleeves are not suitable.

8.10 Changing the saw blade



Disconnect the circular saw from the drive (pull the plug out or switch off the PTO shaft).
Unscrew it and remove the screws of the protective cover (4 screws).



Remove the protective cover of the saw blade.

Wrenches no. 48 and 30 are enclosed. Take wrench no. 48 and fix the nut on the flange (thereby fixing the saw blade), then take key no. 30 to unscrew the nut, which is embedded in the axle of the drive of the saw blade. Unscrew the nut completely to remove the flange of the saw blade. Then remove the saw blade. Always hold the saw blade with both hands. ***When removing and installing the saw blade always use appropriate protective gloves to prevent cuts!***
Before inserting the sharpened blade, check it for possible cracks or other damage (test the sound of it)! Always insert the new blade in reverse order. Firmly tighten the nut on the axis of the saw blade by holding the flange with wrench no. 48. Make sure that the protective cover of the saw blade is positioned so that the cantilever table and the various parts move smoothly and do not come in contact (collision)!

9. TRANSPORT

When transporting saw, close the cantilever part of the saw with detent mechanism (see picture right).



Put the conveyor belt in transport position, as shown below.



Saw with a belt can be transported only when connected to the tractor.

When transporting on the road, follow traffic regulations. The maximum speed is 25 km/h.

In the event that the connector covered the lights on the tractor (towing wagons), at the far rear of the machine you must install a prefabricated light (e.g. magnetic light, lights on the aluminium pole)!

10. TROUBLESHOOTING

What could be the reason, if

... electric motor doesn't start.	The electrical connection is not correctly installed. The cable is damaged. The automatic fuse has been activated or is not sufficiently secured. The engine is still cooling down. Contact resistance at the plug contacts. The cover on the PTO shaft is not closed (with the combined drive)
... electric motor stop after short time.	The saw blade is blunt (unsharpened). The teeth of the saw blade are not set. The cable cross-section is too small. The cable is too long. The motor is overheating. One of the phases of the power is not connected correctly.
... the material for sawing gives off smoke.	The saw blade is improperly mounted. The saw blade is blunt - not sharpened. The direction of rotation is incorrect (change the phase).
... the capacity of sawing is bad.	The saw blade is blunt - not sharpened. The teeth of the saw blade are not spread out evenly. The saw blade is coated with resin!
...the blade does not run straight.	Axle of the saw blade is uneven. Change the axle of the saw blade.

11. WEARING PARTS OF CIRCULAR SAW

The consumable and wearing parts of the circular saw include:

- Aluminum parts on the tilting table blocks in the saw's rocker, V-belts,

- Wear and damage to the circular saw blade,

- Hydraulic oil and oil filter.

Consumable and wearing parts are excluded from the complaint.

12. HYDRAULIC AND ELECTRIC SCHEME

12.1 Hydraulic scheme LANCMAN SAF 707 TT

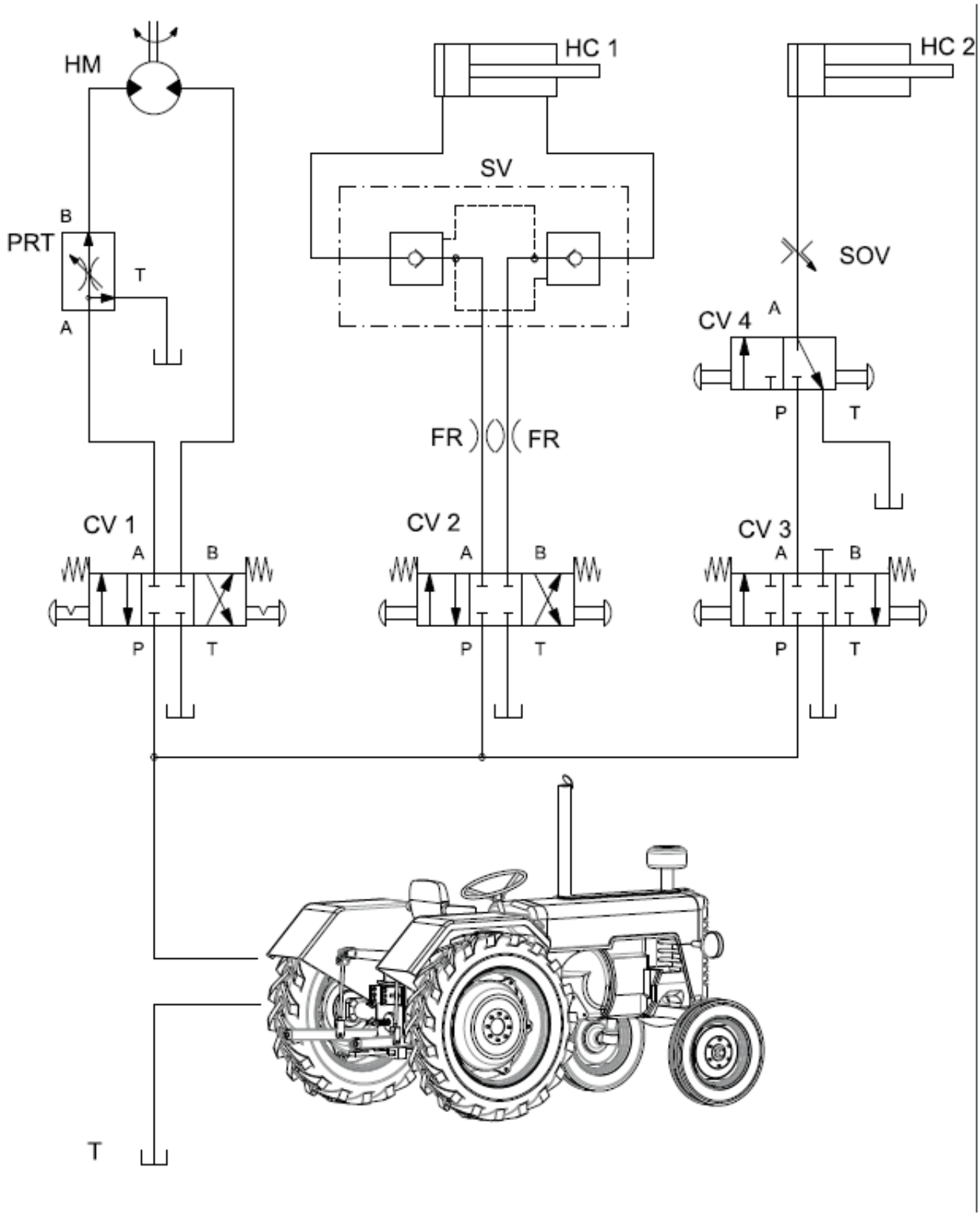

12.2 Hydraulic scheme LANCMAN SAF 707 STR, STEL, STR+EL, BRIGGS

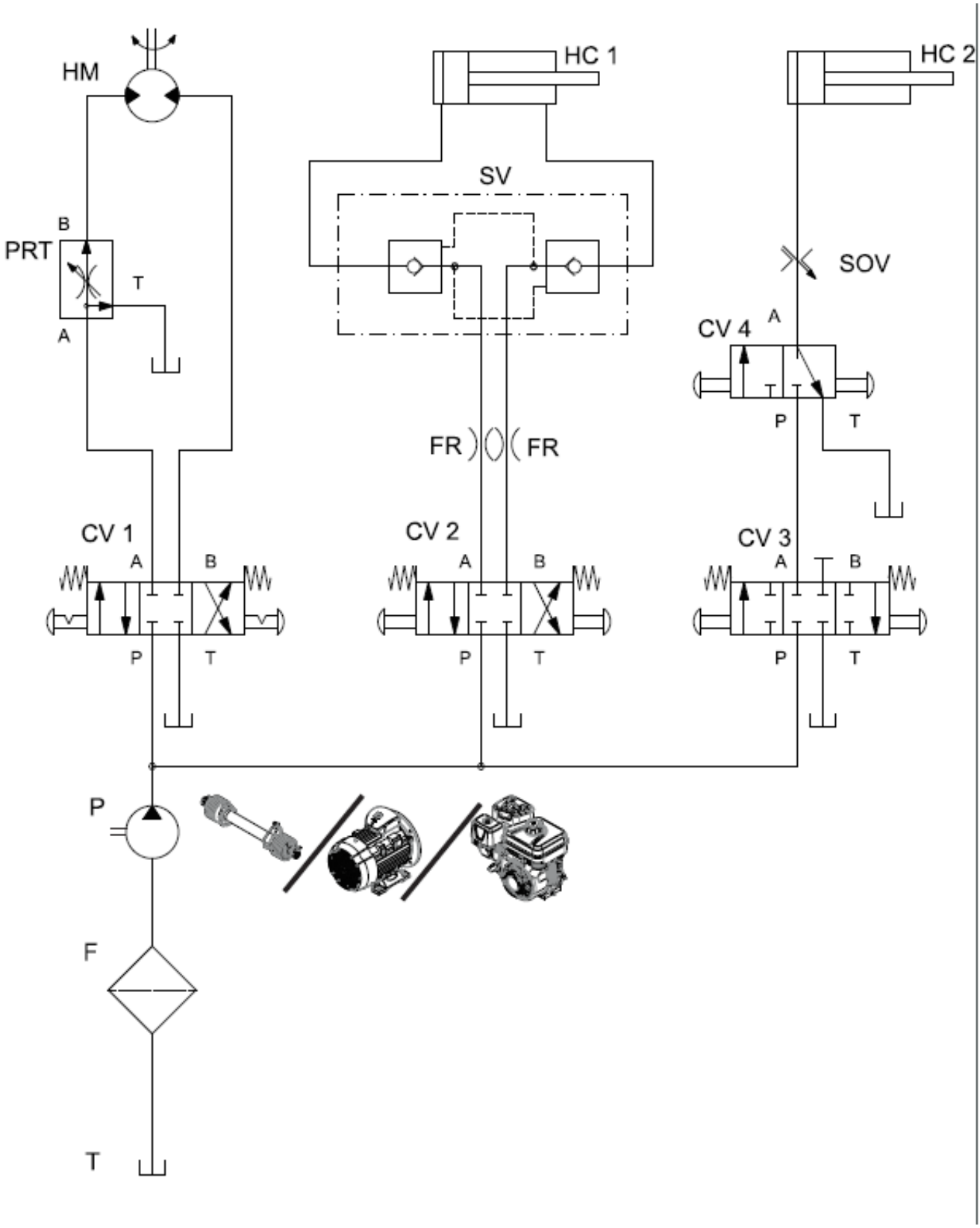

12.3 Electric scheme for LANCMAN SAF 707 STEL

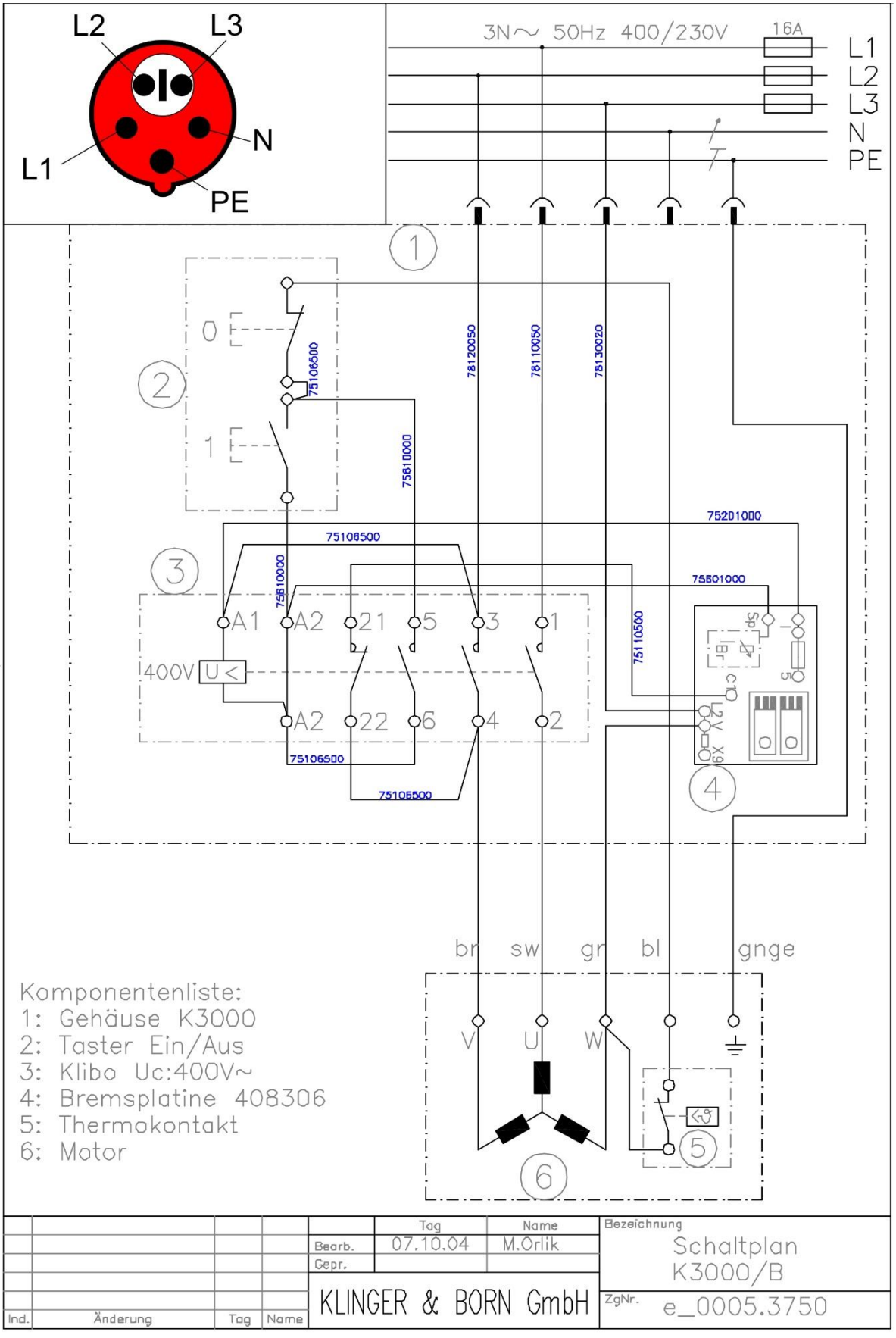

12.4 Electric scheme for LANCMAN SAF 707 STR+EL

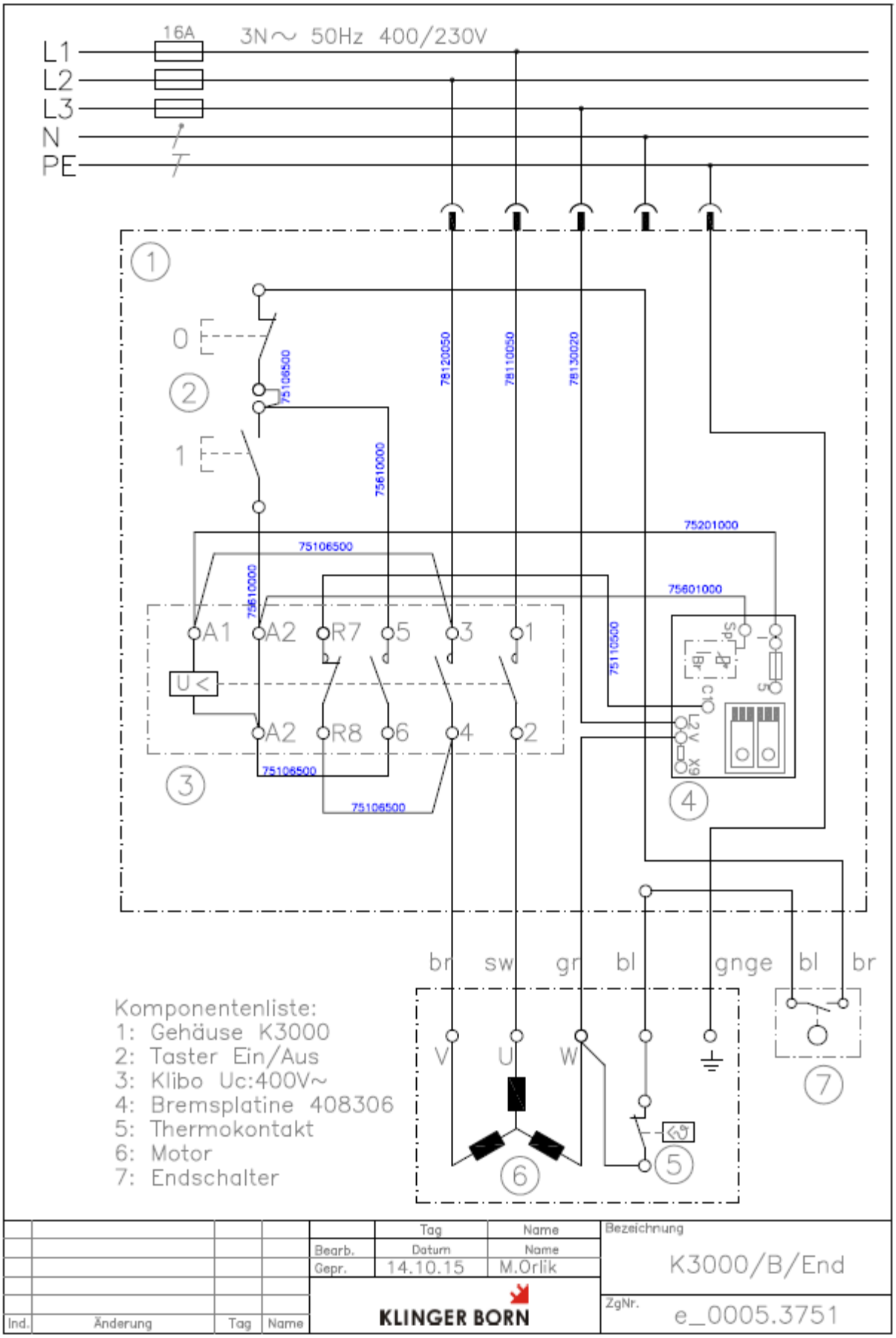

13. PARTS OF THE CIRCULAR SAW

TIP: ŽAGA KROŽNA LANCMAN S TRAKOM SAF 700 STR
ŽAGA KROŽNA LANCMAN S TRAKOM SAF 700 STEL

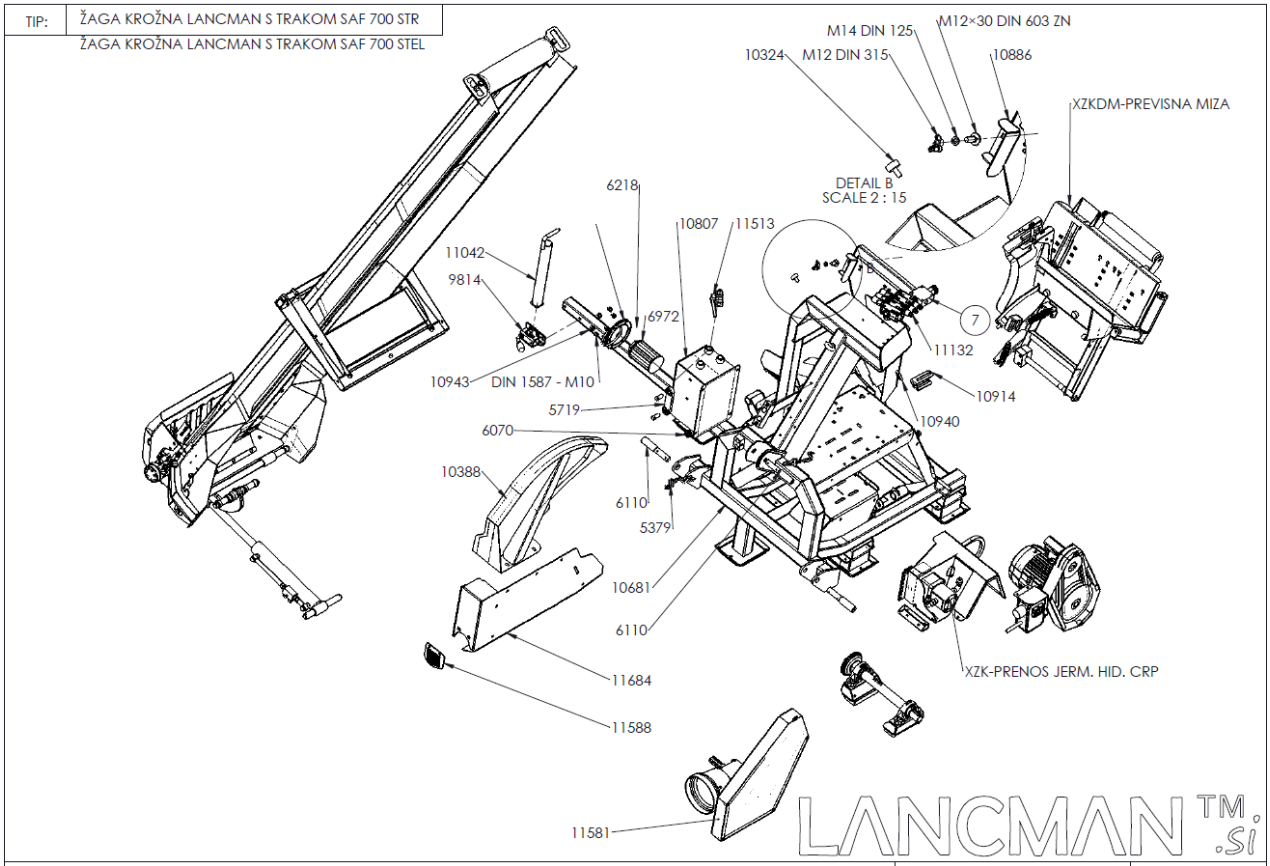

DATUM: 17.1.2015 | STRAN: 2 OD 11

TIP: ŽAGA KROŽNA LANCMAN S TRAKOM SAF 700 STR
ŽAGA KROŽNA LANCMAN S TRAKOM SAF 700 STEL

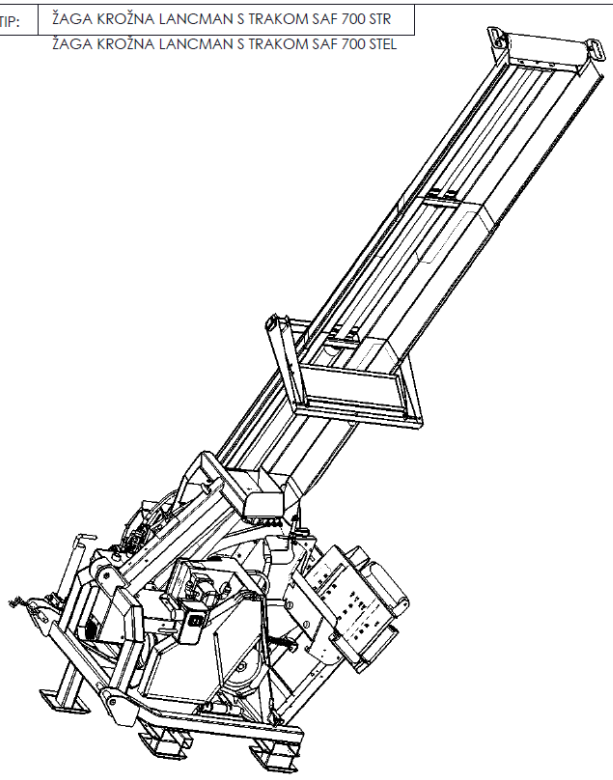

ŽAGA KROŽNA LANCMAN S TRAKOM SAF 700 STR

ITEM NO.	PART NUMBER	IDENT	QTY.
1	XZKTRP-PODVOZJE SESTAVA	10681	1
2	SORNIK ZA TRAK PRILKJUCEK 25×19×180	6110	1
3	XZKTR-ZASCITA SP. DEL SESTAVA	11684	1
4	XC31-PRIROBNICA POG. SKLOPA sestava	11588	6
5	XZK-ZGORNJI DEL ZAŠCITE LISTA KROŽNE ŽAGE LANCMAN VARJENO	10388	4
6	SORNIK ZA TRAK.PRIKLJUCEK 28×22×180	6105	2
7	CEP - IZPUST OLJA MAGNETNI G3/4"	6070	1
8	OLJEKAZ IN TEMP.MP LO5.127TE	5719	3
9	MATICA ZN M10 DIN 1587 KLOBUCASTA	6518	6
10	XZKTRP-CEV PODALJŠEK STAB.	10943	2
11	PRIJEMALKA - KLEMA VLECNEGA DROGA PR 74 VKT 60	9814	2
12	XZKTR-NOGA PODPORNA sestava	11042	2
13	XC10SL-PRIROBNICA FILTRA 1	10244	1
14	O-RING FI117,07X3,53	6218	1
15	FILTER SESALNI 90MIC 1" FI100X143	6972	1
16	XZKTR-REZERVOAR SESTAVA	10807	1
17	VENTIL DELILNI ROCNI 3/8"	11513	1
18	GUMI BLAŽILEC 30×15 MM/ENOSTRANSKI NAVOJ M8×25	10324	1
19	MATICA KRILATA M12 DIN 315	7425	1
20	PODLOŽKA ZN M14 RAVNA DIN 125	6275	1
21	VIJAK POLKROŽNI S 4KOT ZATIKOM M12×30 DIN 603 ZN	7424	1
22	XZK-PLOŠCA ZA ID OMEJEVALEC 3mm	10886	1
23	VENTIL USMERJEVALNI WALVOIL SD5/3-P (KG3-120)/18L/111Lx2/AET	11132	1
24	XZK-NOSILCEK V.3mm	10914	1
25	XZKDM-VODILO PLASTIKA OG.	10940	1

LANCMAN TM .si

DATUM: 17.1.2015 | STRAN: 3 OD 11

TIP:	XZK-POGON EL. MOTOR JERM PRENOS LEVI_1

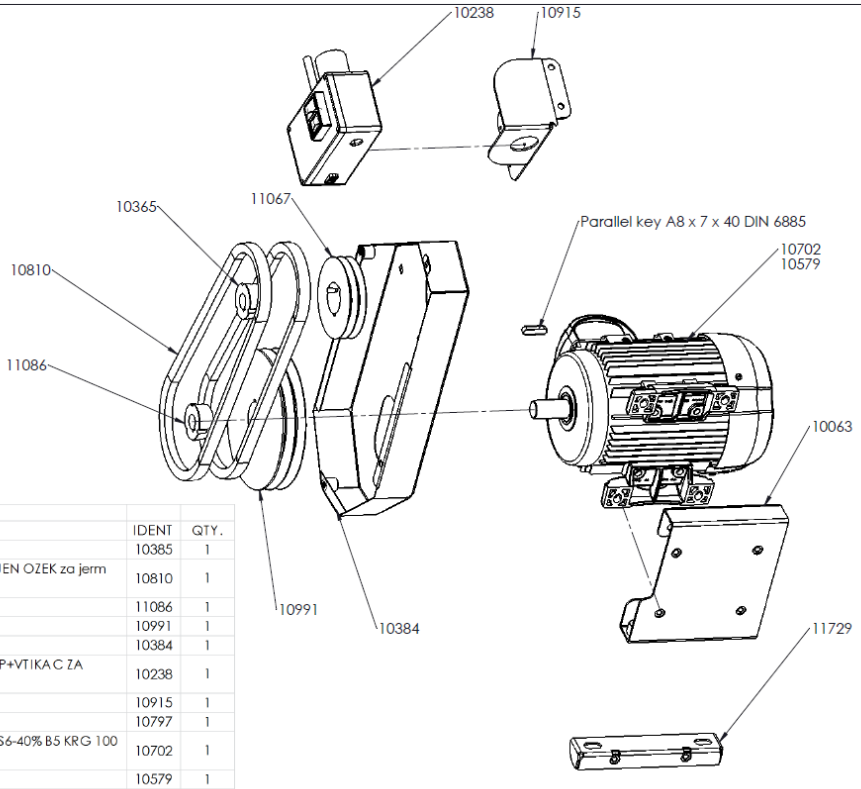

	XZK-POGON EL. MOTOR JERM PRENOS		
ITEM NO.	PART NUMBER	IDENT	QTY.
1	XZK-ZAŠCITA ZA JER del.6 1mm	10385	1
2	XZK-JERMEN KLINASTI 13×1100 SPODAJ OZOBLJEN OZEK za jerm prenos 160/125	10810	1
3	XZK-PUŠA TL 2012/28	11086	1
4	XZK-JERMENICA DVOJNA SPA 160-02 / 2012	10991	1
5	XZK-ZAŠCITA ZA JER del.5 1mm	10384	1
6	STIKALO EL. 400V/5.5kW/10.5 A ZAŠCITA+IZKLOP+VTIKAC ZA ŽAGO LANCMAN	10238	1
7	XZK-NOSILEC S P.3mm	10915	1
8	MOZNIK 8×7×32 FORM A DIN 6885 Ck 45	10797	1
9	ELEKTROMOTOR 5.5 kW/400V/1350 OBR. B3/B5 S6-40% B5 KRG 100 L2-4	10702	1
10	ELEKTROMOTOR 7.5 KW/400V /S6-40%/B3/IP55	10579	1
11	XZK-NOSILEC Z NAPENJALCEM MOTORJA ZA KROŽNO ŽAGO - CINKAN	10063	2
12	XZK-PLOSICA OJ. ZA VIJ. POG. sestava	11729	2
13	XZK-JERMENICA DVOJNA SPA 125-02 / 1610	11067	1
14	XZK-PUŠA TL 1610/35	10365	1

LANCMAN™.si

	DATUM: 17.1.2015	STRAN: 4 OD 11

TIP:	XZK-POGON KARDAN+JERMENICE+OS

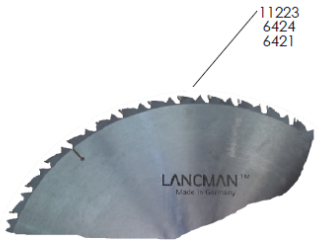

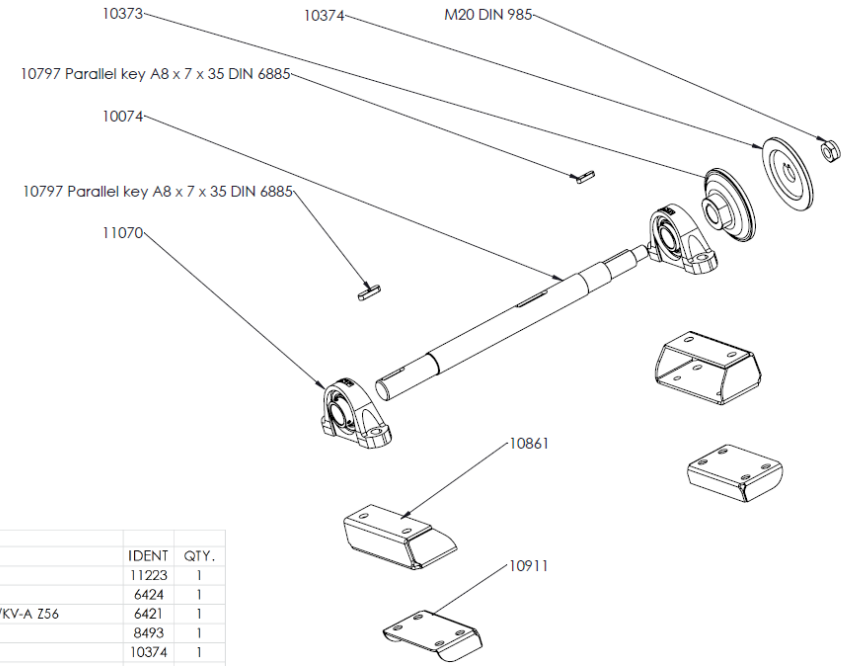

	XZK-POGON KARDAN+JERMENICE+OS		
ITEM NO.	PART NUMBER	IDENT	QTY.
1	LIST ŽAGNI FI 700/30/VIDIA/HM-SWZ/Z-84	11223	1
2	LIST ŽAGNI FI 700/30/VIDIA/HM-LFZ/Z-42	6424	1
3	LIST ŽAGNI FI 700/30/×3.2/KROM-VANADIUM/KV-A Z56	6421	1
4	MATICA ZN M20 SAMOVAROVALNA DIN 985	8493	1
5	XZK-PRIROBNICA KOV125 DEL2	10374	1
6	XZK-PRIROBNICA KOV 125 DEL1	10373	1
7	MOZNIK 8×7×32 FORM A DIN 6885 Ck 45	10797	1
8	XZK-OS ZA JKP V2	10074	1
9	MOZNIK 8×7×32 FORM A DIN 6885 Ck 45	10797	1
10	LEŽAJ Z OHIŠJEM UCP 207 JIB	11070	2
11	XZK-NOSILEC LEZAJA 5mm	10861	2
12	XZK-OJACITEV LEZAJA 3mm	10911	2

LANCMAN™.si

	DATUM: 17.1.2015	STRAN: 5 OD 11

TIP: XZKTR-TRANSPORTNI TRAK TT450 + komponenete

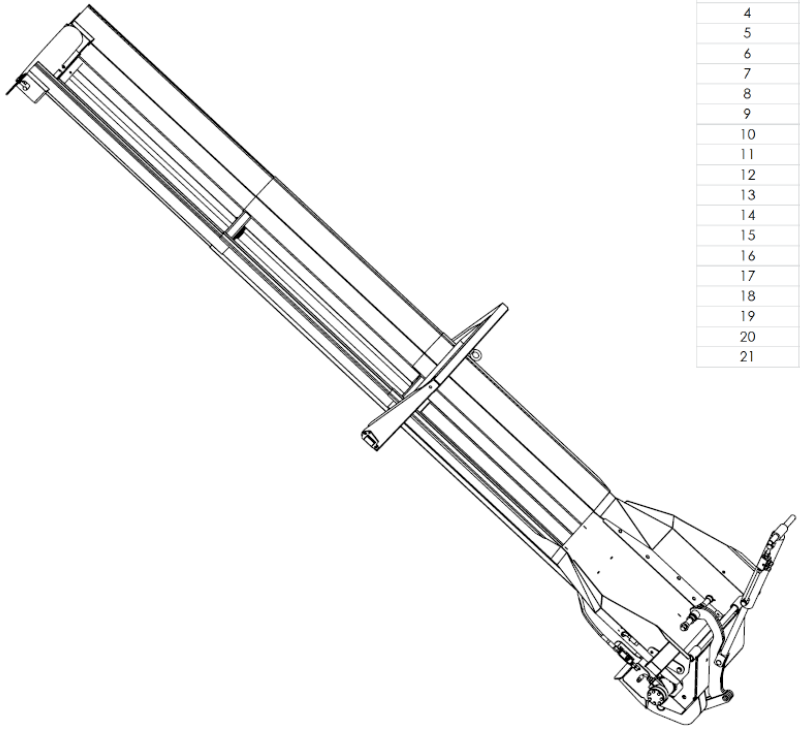

XZKTR-TRANSPORTNI TRAK TT450 + komponenete			
ITEM NO.	PART NUMBER	IDENT	QTY.
1	XZKTR-MRZA ZASCITNA DEL2 V2 2mm	11541	1
2	XZKTR-NOSILEC MR KR1 V2 2mm	11540	2
3	GUMI BLAŽILEC 30×15 MM/ENOSTRANSKI NAVOJ M8×25	10324	2
4	XKZTR-TRANSPORTER TAJFUN TT 403	10757	1
5	XC32-DRSNI LEŽAJ ZA DVIŽNO MIZO FI24/30×20	10013	24
6	XZKTR-OS PRECNA fi24x735	10944	2
7	XZKTR-PLOSCICA DM1 sestava	11007	1
8	XZKTR-SORNIK ZA CILVZ fi24x290 St 37-2 S.V.	11046	1
9	XZKTR-ZASCITA ZA DRVA PAD. 5mm	11102	1
10	#N/V	11736	1
11	XZKTR-PODLOZNA PLOSCA ZA DRVA PAD. 3mm	11580	1
12	XZKTR-NOSILEC TRAKA SESTAVA	10806	1
13	XZKTR-PLOSCICA DM sestava	11008	1
14	XZKTR-SORNIK ZA CILPOV fi24x240 St 37-2 S.V.	11045	1
15	XZK-CEV HIDRAVLICNA FI12X40 S PRIKLJ. B3/8 (R1160)	11569	1
16	X-REDUCIRNI PRIKLJUCEK 3/8"-3/8" z 1mm IZVRTINO	10320	2
17	XZK-VIJAK VOTLI 3/8 (G-7208-06)	11570	1
18	XZK-VIJAK VOTLI 3/8 (G-7208-06)	11570	1
19	XZK-CEV HIDRAVLICNA FI12X300 S PRIKLJ. B3/8 (R1271)	11568	1
20	XZK-VENTIL HIDRAVLICNI BLOKIRNI 3/8-12L (VBPDE 3/8L 2)	11572	1
21	XC32-CILINDER DM50-30-311,5 SZI	9871	1

LANCMAN TM .si

DATUM: 17.1.2015 | STRAN: 7 OD 11

TIP: XZKTR-TRANSPORTNI TRAK TT450 + komponenete

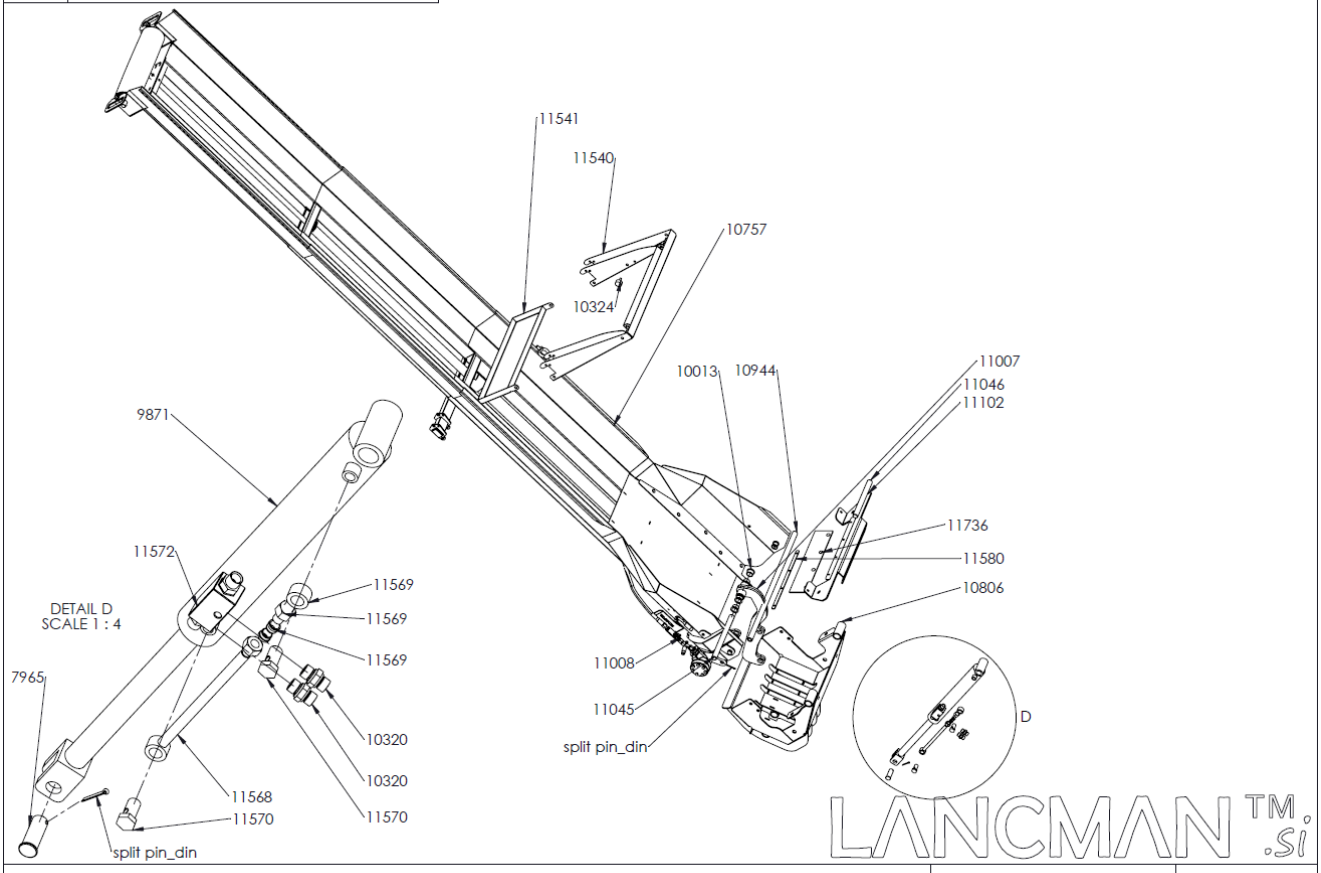

LANCMAN TM .si

DATUM: 17.1.2015 | STRAN: 6 OD 11

TIP:	XZKDM-PREVISNA MIZA

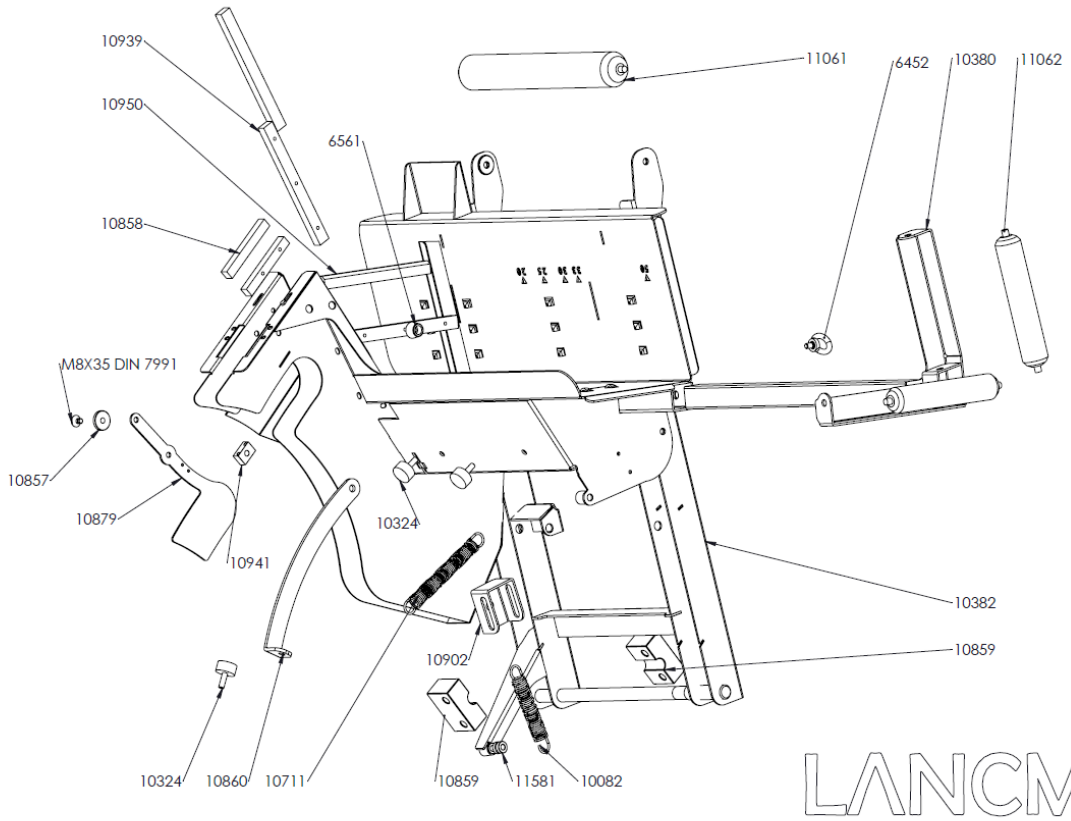

LANCMAN TM .si

	DATUM: 17.1.2015	STRAN: 8 OD 11

TIP:	XZKDM-PREVISNA MIZA

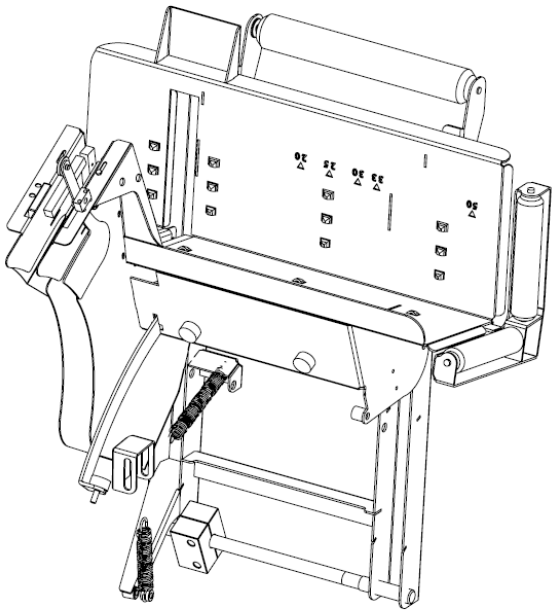

XZKDM-PREVISNA MIZA			
ITEM NO.	PART NUMBER	IDENT	QTY.
1	XZKDM-VODILO ALUMINIJ	10939	3
2	XZKDM-VODILO ALUMINIJ posnetje	10950	1
3	XZKDM-VODILO ALUMINIJ KRATKO	10858	2
4	VIJAK IMBUS ZN M8X35 DIN 7991 VGREZ.GLAVA	9719	1
5	XZKDM-PODLOZKA DRSNA PLASTIKA	10857	1
6	XZK-ZASCITA POKRIVALO OD M 3mm	10879	1
7	XZKDM-LEŽAJNA ENOTA	10941	1
8	GUMI BLAŽILEC 30×15 MM/ENOSTRANSKI NAVOJ M8×25	10324	1
9	XZK-TRAK OMEJEVALEC 5mm	10860	1
10	XZK-VZMET NATEZNA 3x23×152,26x ZN	10711	2
11	GUMI BLAŽILEC 30×15 MM/ENOSTRANSKI NAVOJ M8×25	10324	2
12	XZKDM-NOSILEC NA P. VZMETI 3mm	10902	1
13	XZK-LEŽAJNA ENOTA DEL2	10859	2
14	XZK-SEDIŠCE VZMETI KOTERM	11581	4
15	XZK-VZMET NATEZNA 3×23×113,5 ZN	10082	1
16	XZK-LEŽAJNA ENOTA DEL2	10859	2
17	XZKDM-PREVISNA MIZA VARJENA	10382	1
18	XZK-VALJCEK ZA DDM v 2	11062	2
19	XZK-IZVLECENA PODPORA PREV.MIZE ZA POLENO - CINKANO	10380	1
20	VIJAK OBROCNI ZN M12 DIN 580 ART	6452	1
21	XZK-VALJCEK ZA POTISK DM v2	11061	1

LANCMAN TM .si

	DATUM: 17.1.2015	STRAN: 9 OD 11

TIP:	XZK-KOTNI PRE+NOSILE+JERM11

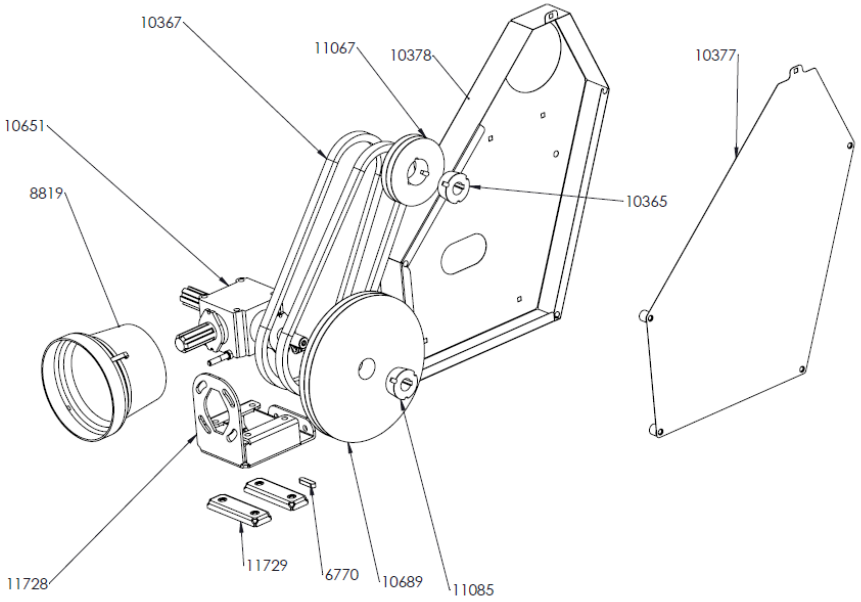

ITEM NO.	XZK-KOTNI PRE+NOSILE+JERM PART NUMBER	IDENT	QTY.
1	XZK-PUŠA TL 2517/22	11085	1
2	XZK-JERMENICA DVOJNA SPA 280-02 /2517	10689	1
3	MOZNIK 6×6×25 FORM A DIN 6885 CK45K	6770	1
4	XZK-PLOSICA OJ. ZA VIJ. POG. sestava	11729	1
5	XZK-NAPENJALEC KP V1 sestava	11728	1
6	KARDANSKA KAPA 76/201 - OVALNA	8819	1
7	RKŽ-Multiplikator kotni1:2.78 za KŽ	10651	2
8	XZK-JERMEN AVX 13×1425 La	10367	2
9	XZK-JERMENICA DVOJNA SPA 125-02 / 1610	11067	1
10	XZK-PUŠA TL 1610/35	10365	1
11	XZK-ZAŠCITA ZA JER del.2 1mm	10378	1
12	XZK-ZAŠCITA ZA JER. 1mm	10377	1

LANCMAN TM .si

	DATUM: 17.1.2015	STRAN: 10 OD 11

TIP:	XZK-PRENOS JERM. HID. CRP

ITEM NO.	XZK-PRENOS JERM. HID. CRP. PART NUMBER	IDENT	QTY.
1	XZK-ZASCITA ZA JP ZAPRTJE KPL 1mm	11251	1
2	XZK-JERMENICA DVOJNA SPA 118-02 TL 1610	11241	2
3	XZK-PUŠA TL 1610/40	11242	1
4	XZK-PUŠA TL 1610/38	11730	1
5	XZK-JERMEN KLINASTI 13×800 AVX	11244	2
6	XZK-PUŠA TL 1610/22	11321	2
7	XZK-DRZALO LEZ ENOTE CRP.	11250	1
8	XZK-NAPENJALEC NOSILEC EL. sestava	11727	1
9	CRPALKA - NASTAVEK HID.CRPALKE GR2-SP-2-C	11240	1
10	ZOBNIK ZA MULTIPLIKATOR GR2 MO 82 B 25×22 DIN 5482 (2/14)	5084	1
11	KOLENO 3/4"-3/4" fiksno+gibljivo 90°	7287	1
12	CRPALKA ZOBNIŠKA GR-2 8 CC 250 BAR/DESNA	7691	1
13	KOLENO 1/2"-1/2" fiksno+gibljivo 90°	7288	1

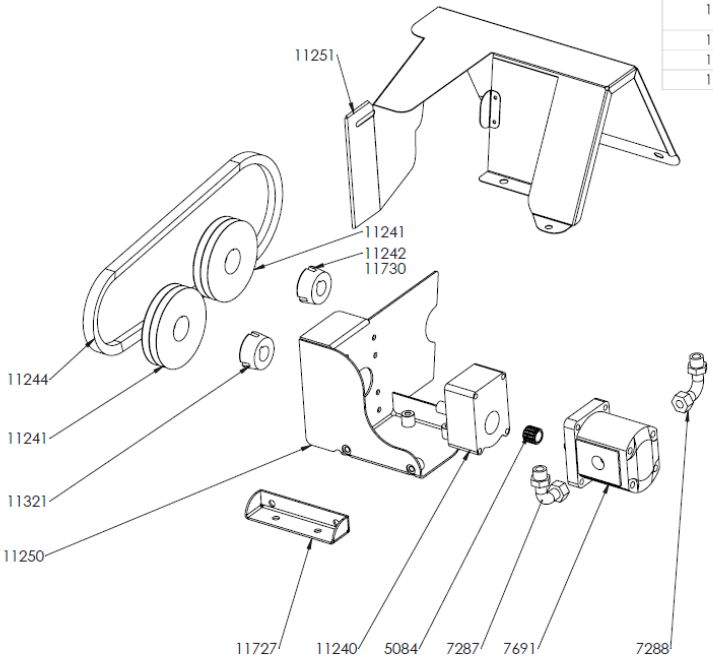

LANCMAN TM .si

	DATUM: 17.1.2015	STRAN: 11 OD 11

GARANCIJSKI LIST • JAMSTVENI LIST • GARANTNI LIST CERTIFICATE OF GUARANTEE • GARANTIESCHEIN • CERTIFICATO DI GARANZIA • ZÁRUČNÝ LIST • ZÁRUČNÍ LIST • JÓTÁLLÁSI JEGY • GARANTIE • CERTIFICADO DE GARANTÍA • CERTIFICATE OF WARRANTY • CERTIFICAT DE GARANTIE

NAZIV IZDELKA•PROIZVOD•PRODUCT•PRODUKT•PRODUIT• PRODUCTO • PRODUS

TIP/TYPE/TYP/TIPO/TIP:

SER.ŠT. • SER.NR. • SER.NO. • NÚMERO SERIAL • SERIA DE FABRICATIE:

- Ime, sedež in žig prodajalca:
- Naziv, sedište i pečat poduzeća:
- Reseller full name and address:
- Name, Sitz und Stempel des Unternehmens:
- Jméno, adresa razitko prodávajiciho:
- Meno, adresa a pečiatka predajcu:
- A terméket forgalmazó cég neve, székhelye és bélyégzoje:
- Concessionnaire nom, lieu et cachet:
- Nobre, dirección y sello de vendedor:
- Numele, adresa si stampila vanzatorului:

Datum izročitve blaga • Datum prodaje • Date of purchase • Verkaufsdatum • Data sprzedazy • Date predaja • Az eladás dátuma • Date de la vente • Fecha de la entrega • Data vanzarii

Podpis prodajalca • Potpis • Signature • Unterschrift • Potpis • Aterförsäljares namnteckning • Podpis prodejce • Aterförsäljares namnteckning • Signature du vendeur • Firma de vendedor • Semnatura vanzatorului

LANCNI

GOMARK
trgovina in proizvodnja d.o.o.

Čeplje 56, SI-3305 Vransko, Slovenija
Tel.: +386 (0) 3 700 15 03, info@gomark.si