LANCMAN STX 26

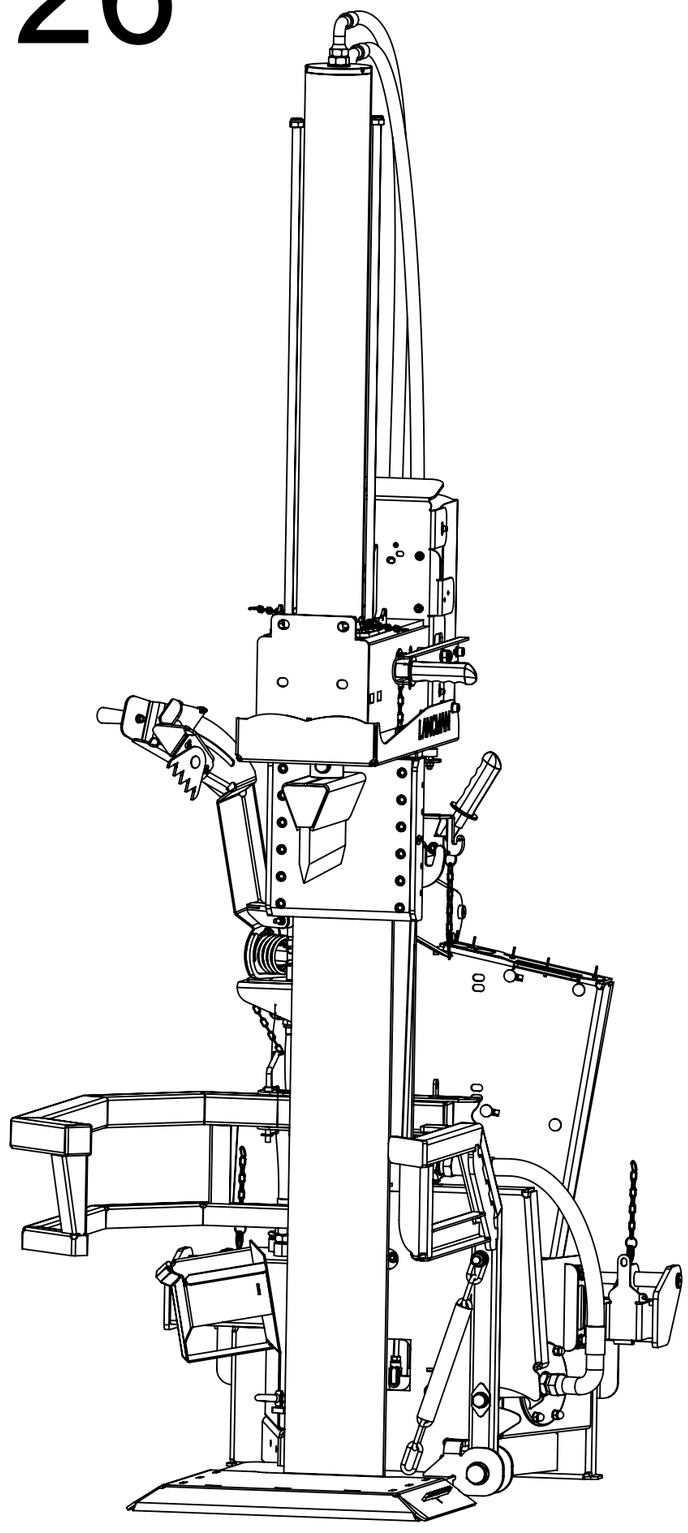

LANCMAN® by GOMARK

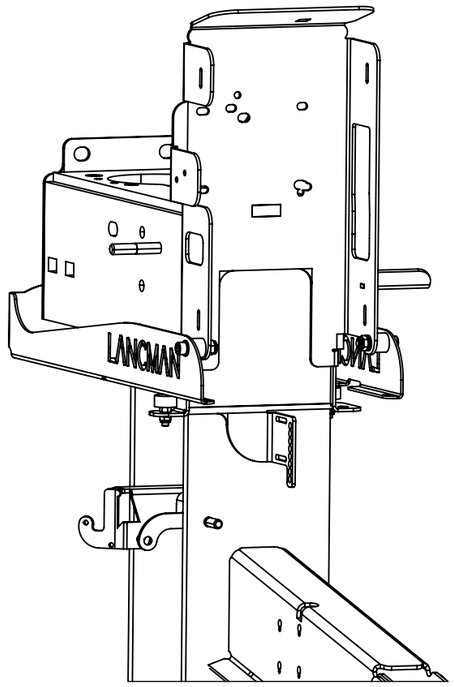

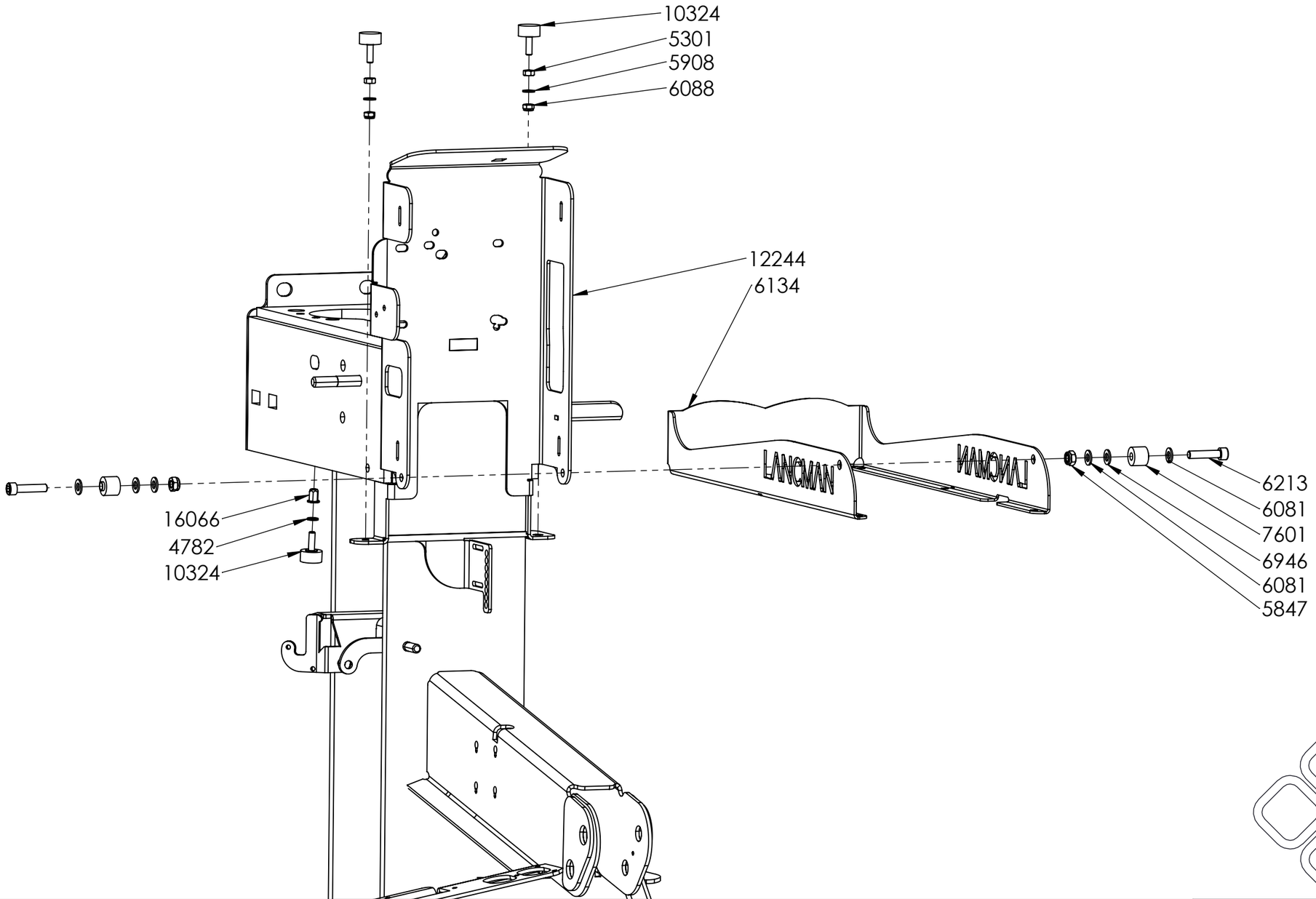

LANCMAN® by GOMARK

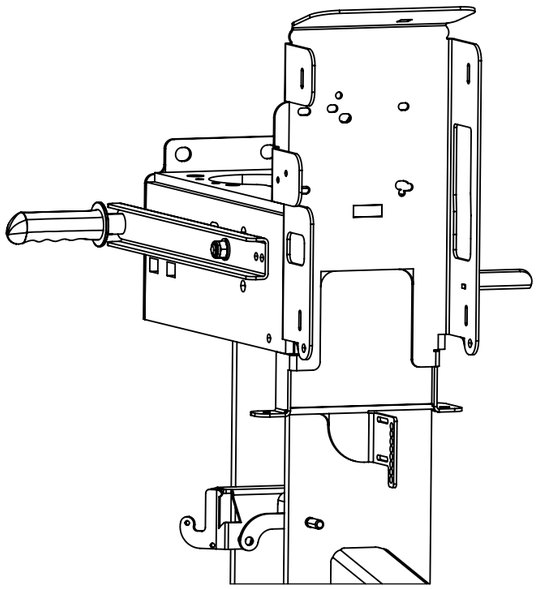

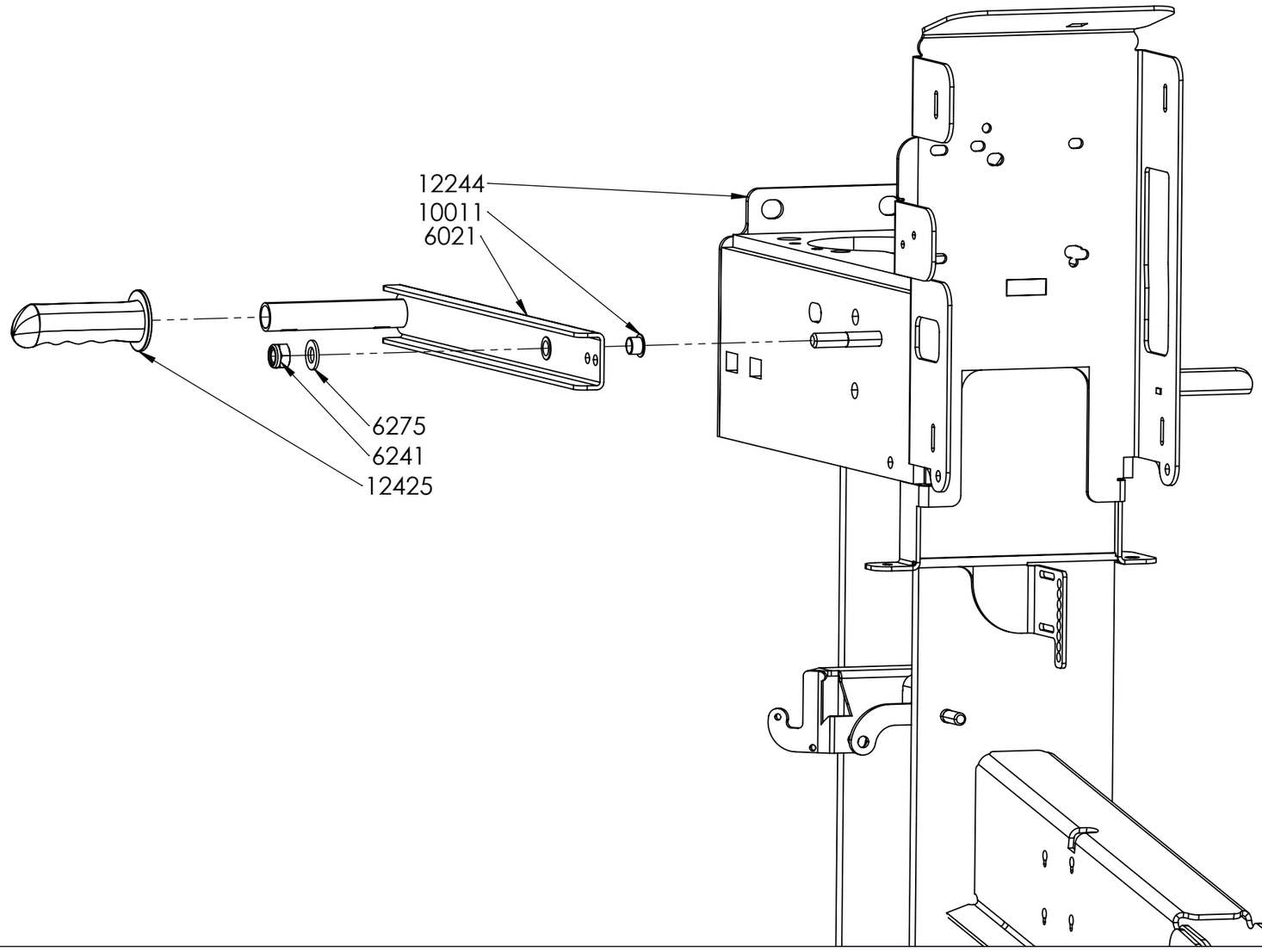

LANCMAN® by GOMARK

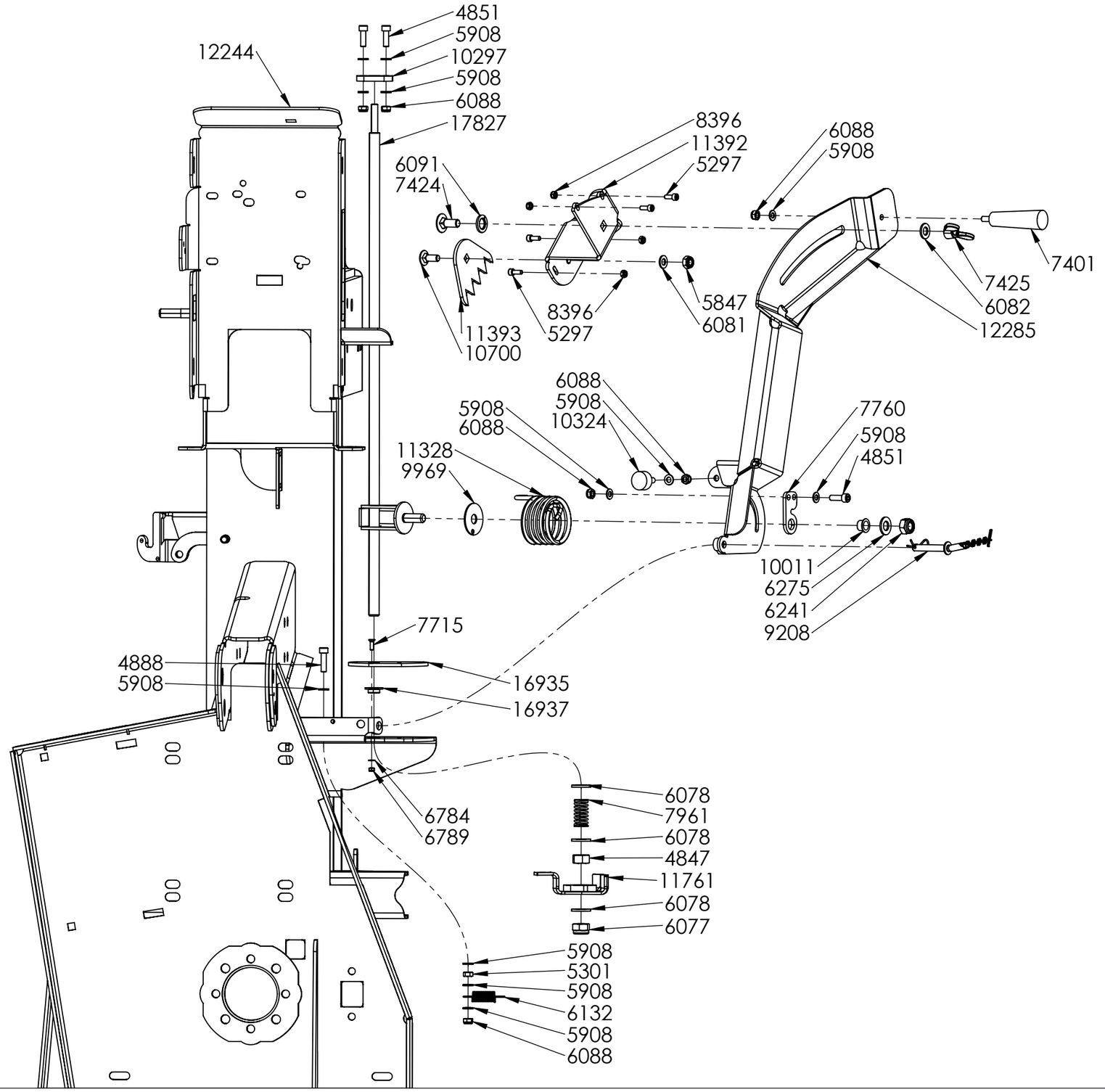

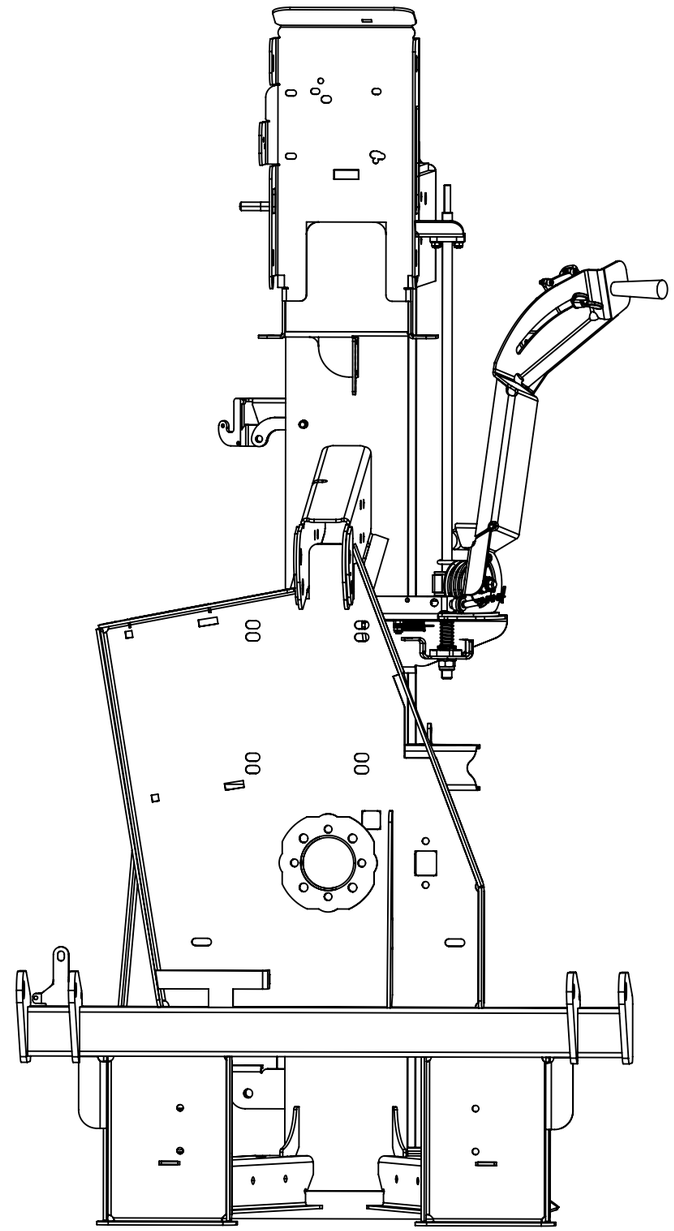

LANCMAN® by GOMARK

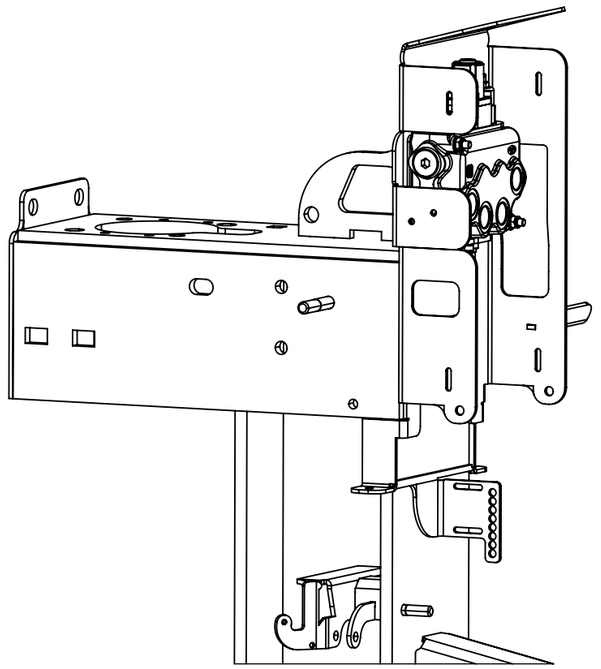

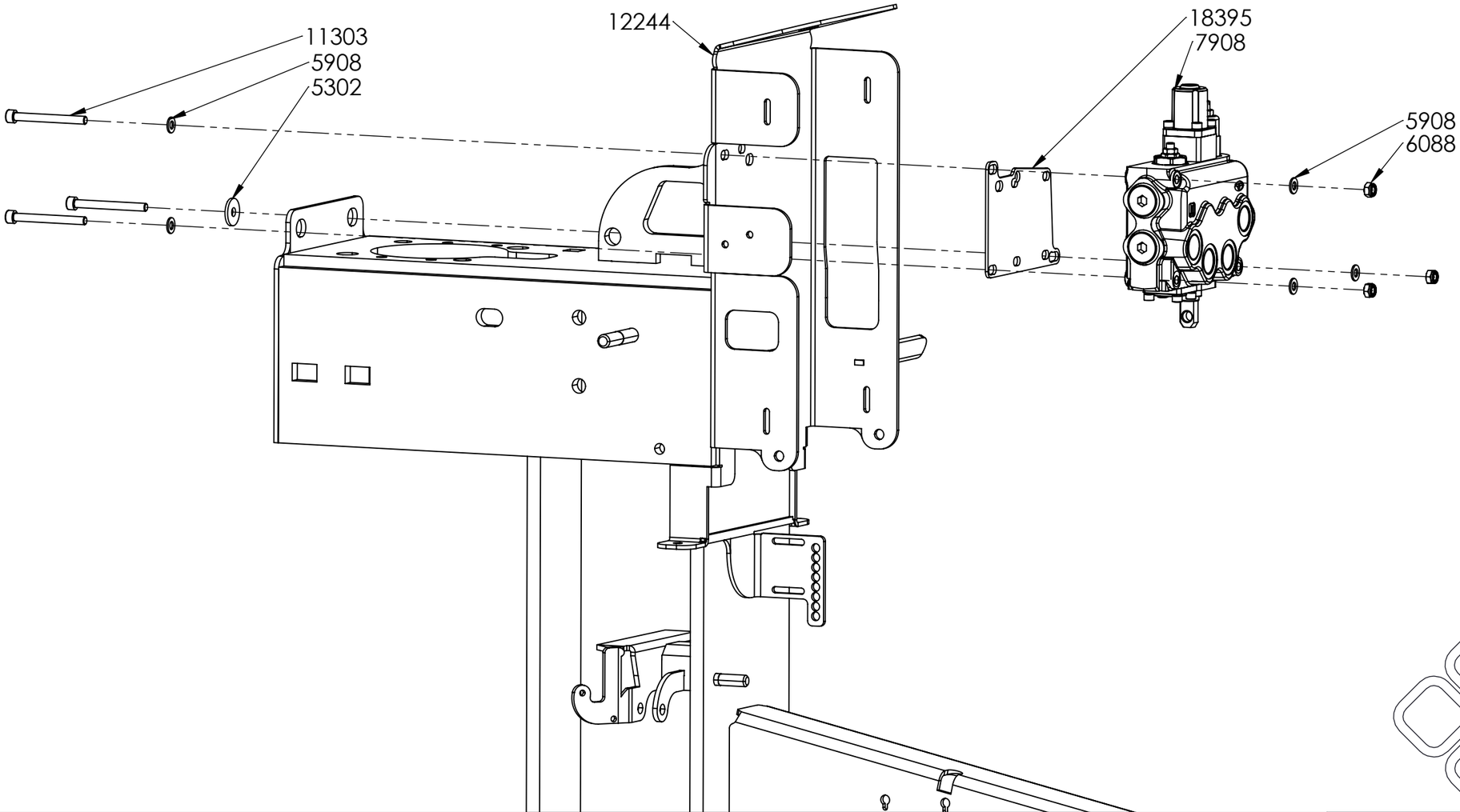

LANCMAN® by GOMARK

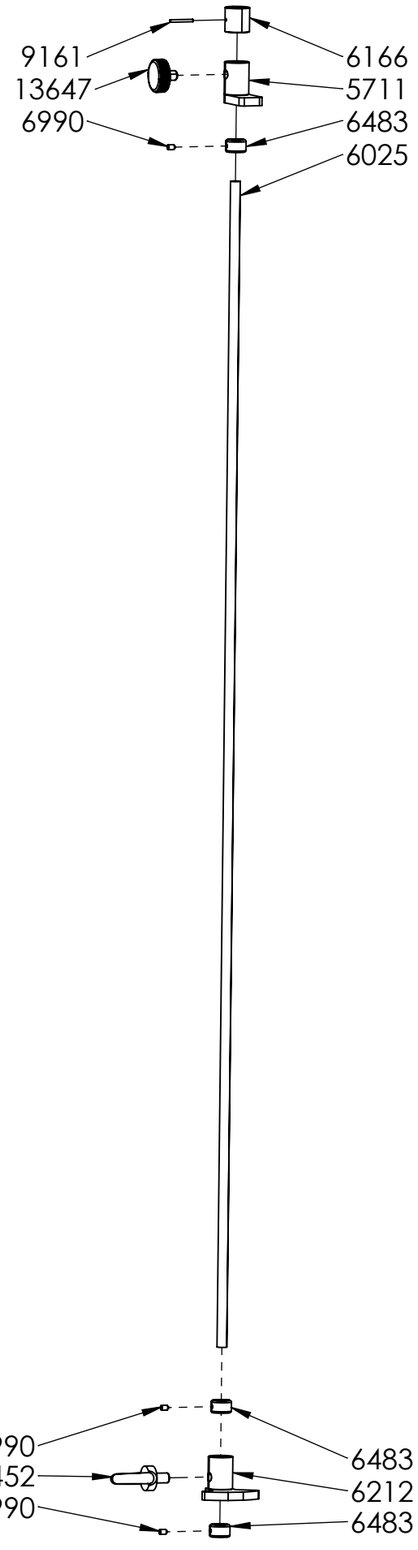

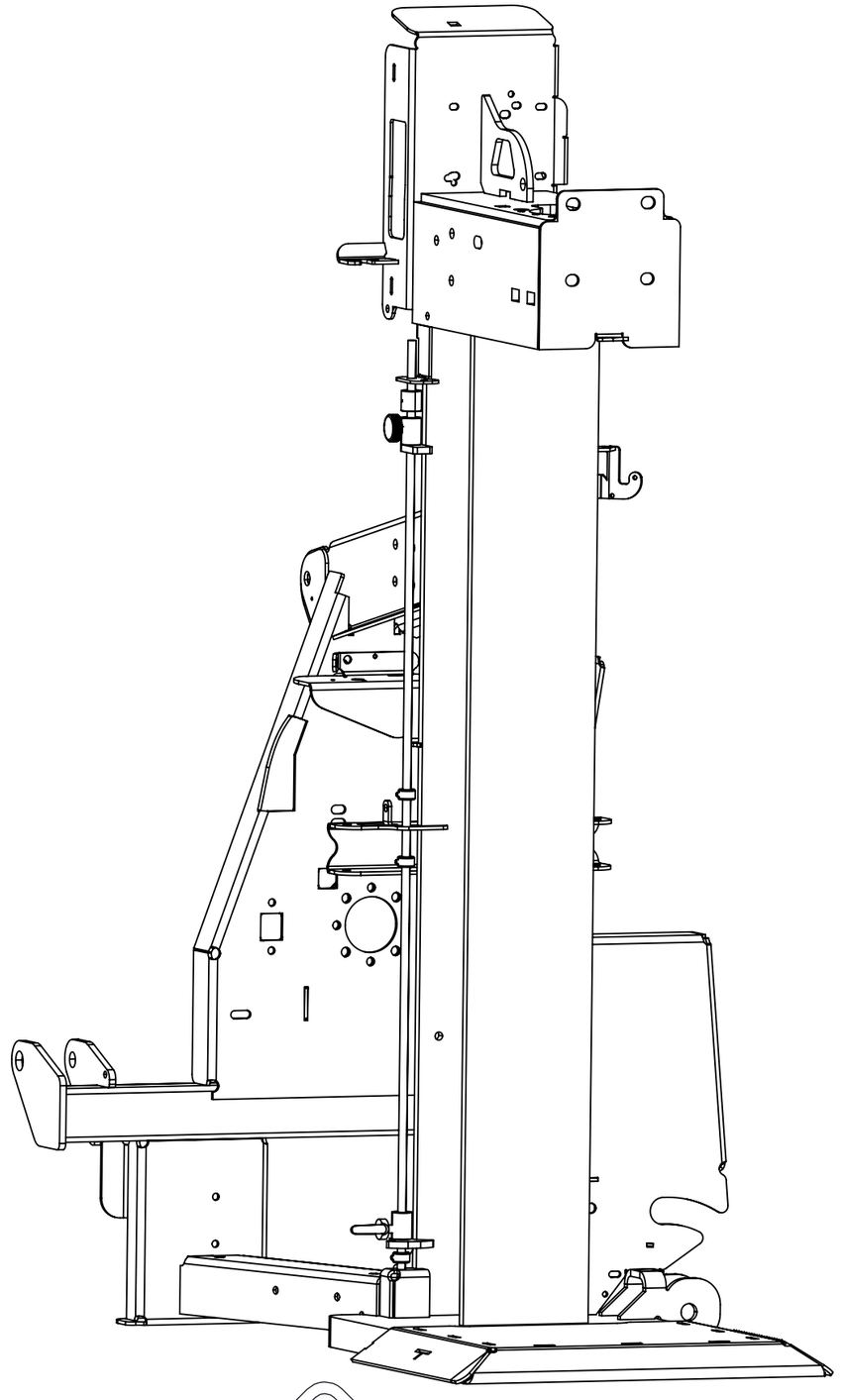

LANCMAN® by GOMARK

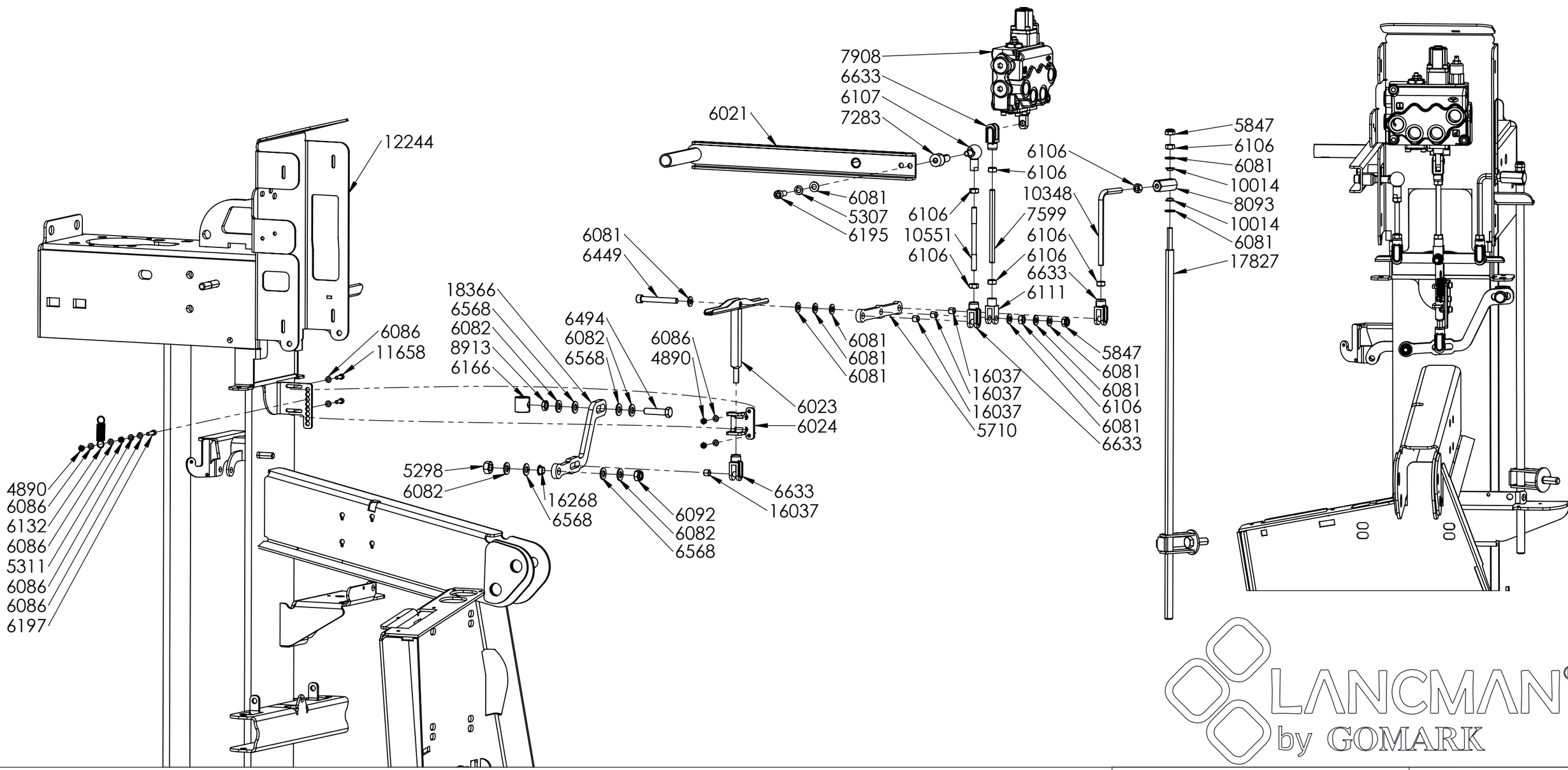
12244
7908
6633
6107
7283
6021
6081
5307
6195
6106
10551
6106
6106
6106
10348
7599
6106
6106
6633
6111
5847
6106
6081
10014
8093
10014
6081
17827
6081
6449
18366
6568
6082
8913
6166
6494
6082
6568
6086
4890
6086
11658
6081
6081
6081
16037
16037
16037
5710
5847
6081
6081
6106
6081
6633
6023
6024
5298
6082
16268
6568
6092
6082
6568
6633
16037
4890
6086
6132
6086
5311
6086
6086
6197

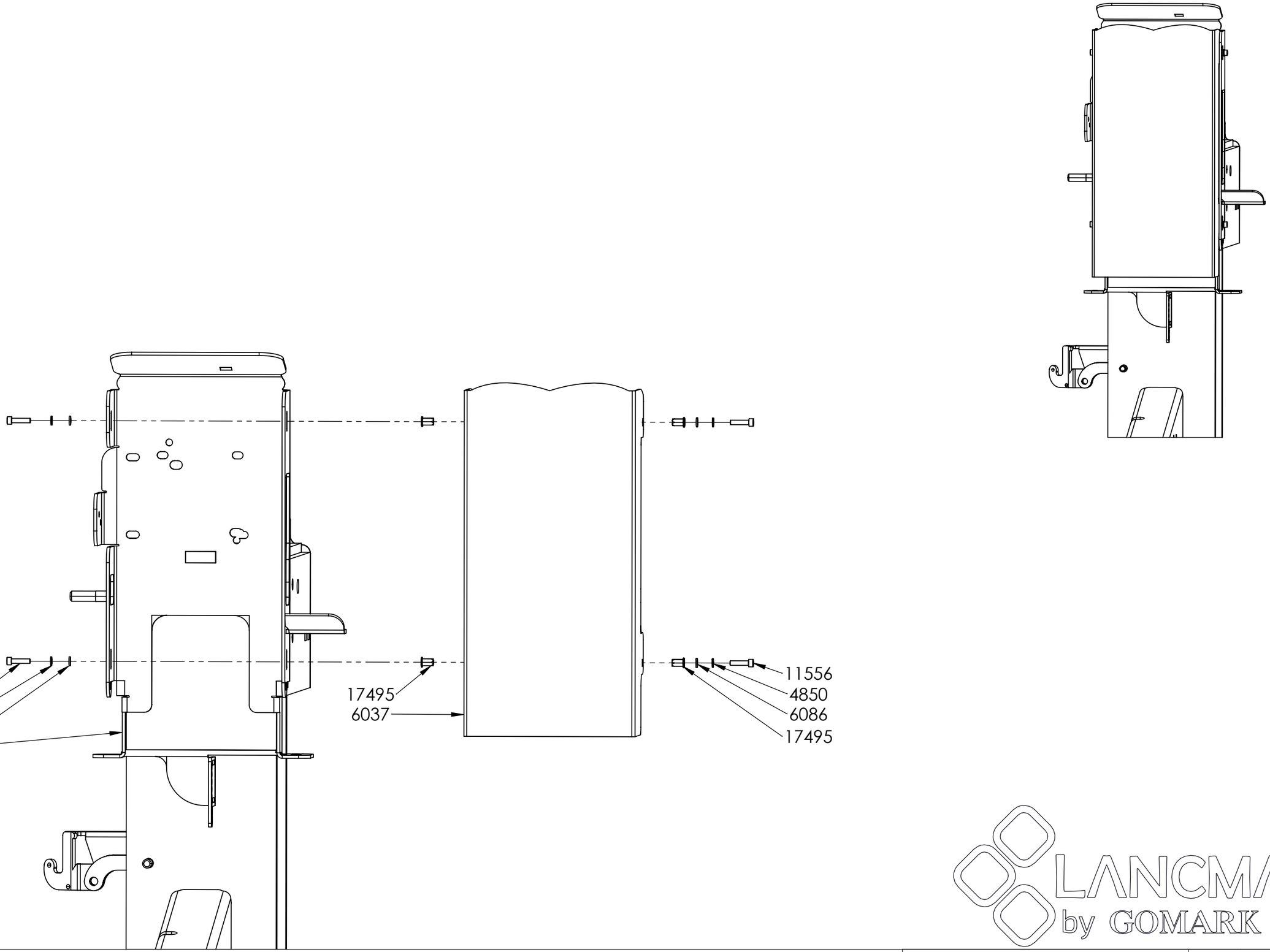

LANCMAN® by GOMARK

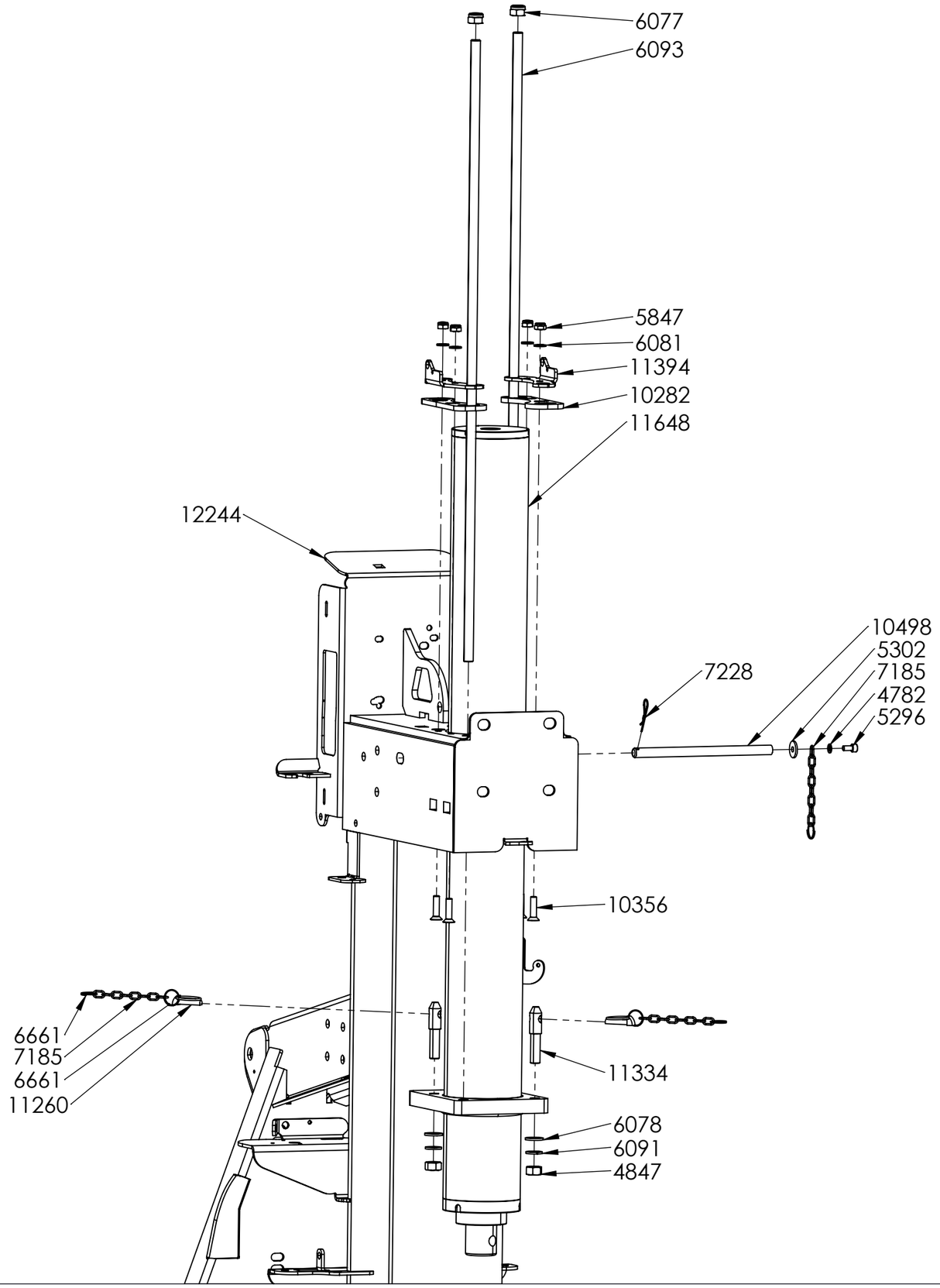

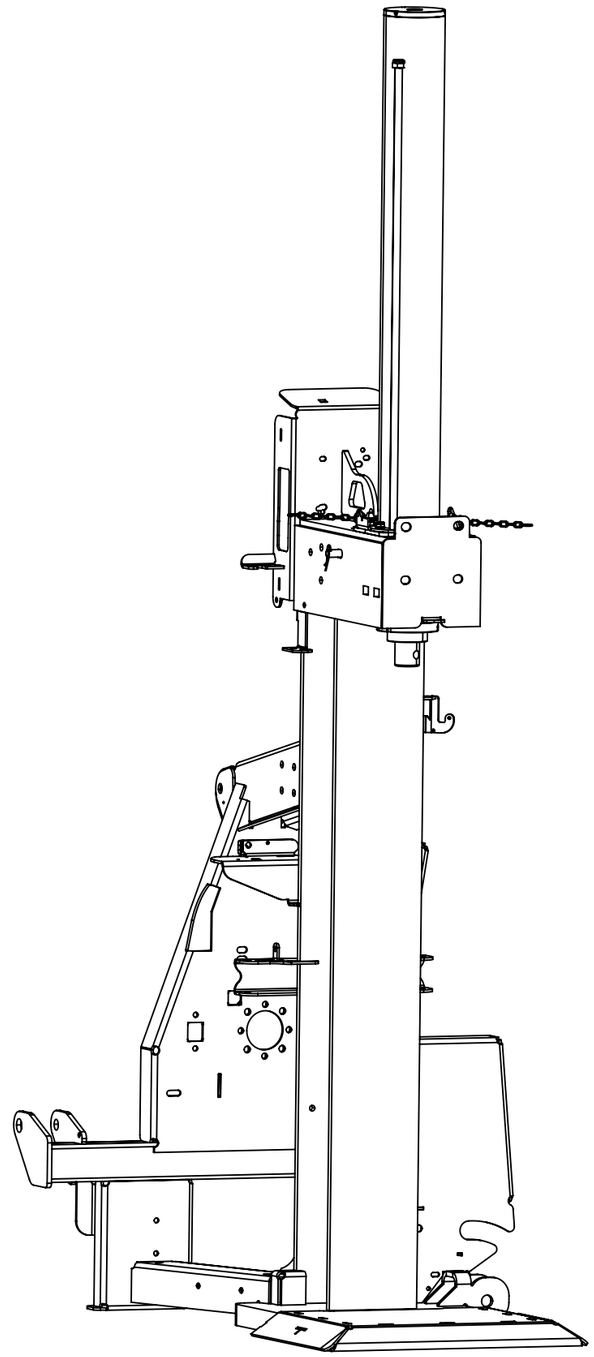

LANCMAN® by GOMARK

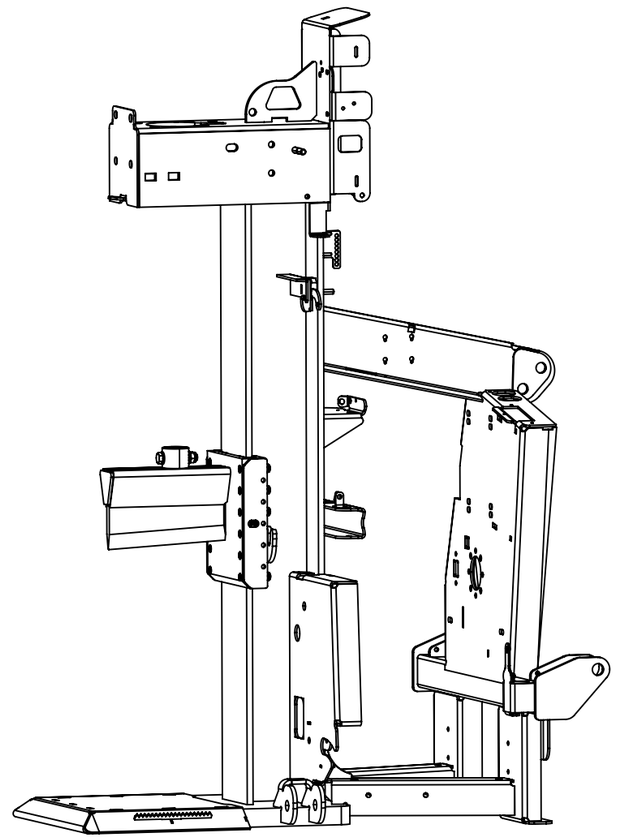

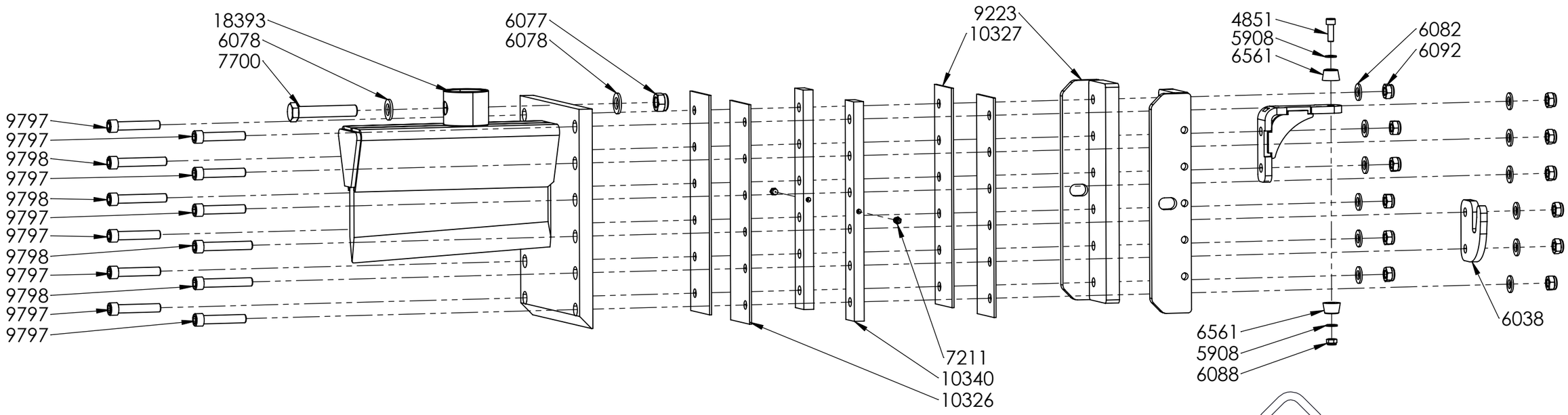

LANCMAN® by GOMARK

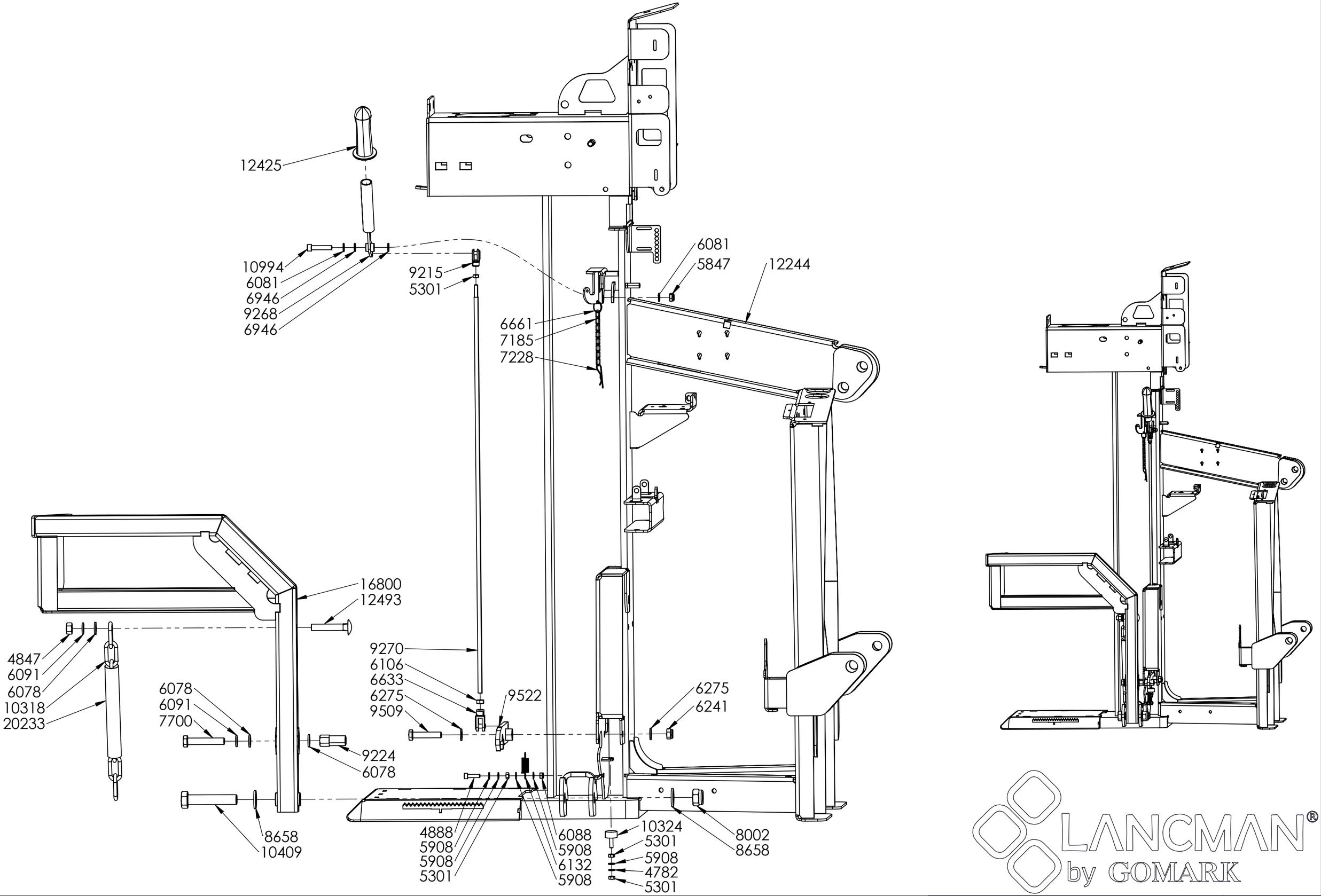
12425
10994
6081
6946
9268
6946
9215
5301
6661
7185
7228
6081
5847
12244
16800
12493
4847
6091
6078
10318
20233
6078
6091
7700
9224
6078
8658
10409
9270
6106
6633
6275
9509
9522
6275
6241
4888
5908
5908
5301
6088
5908
6132
5908
10324
5301
5908
4782
5301
8002
8658

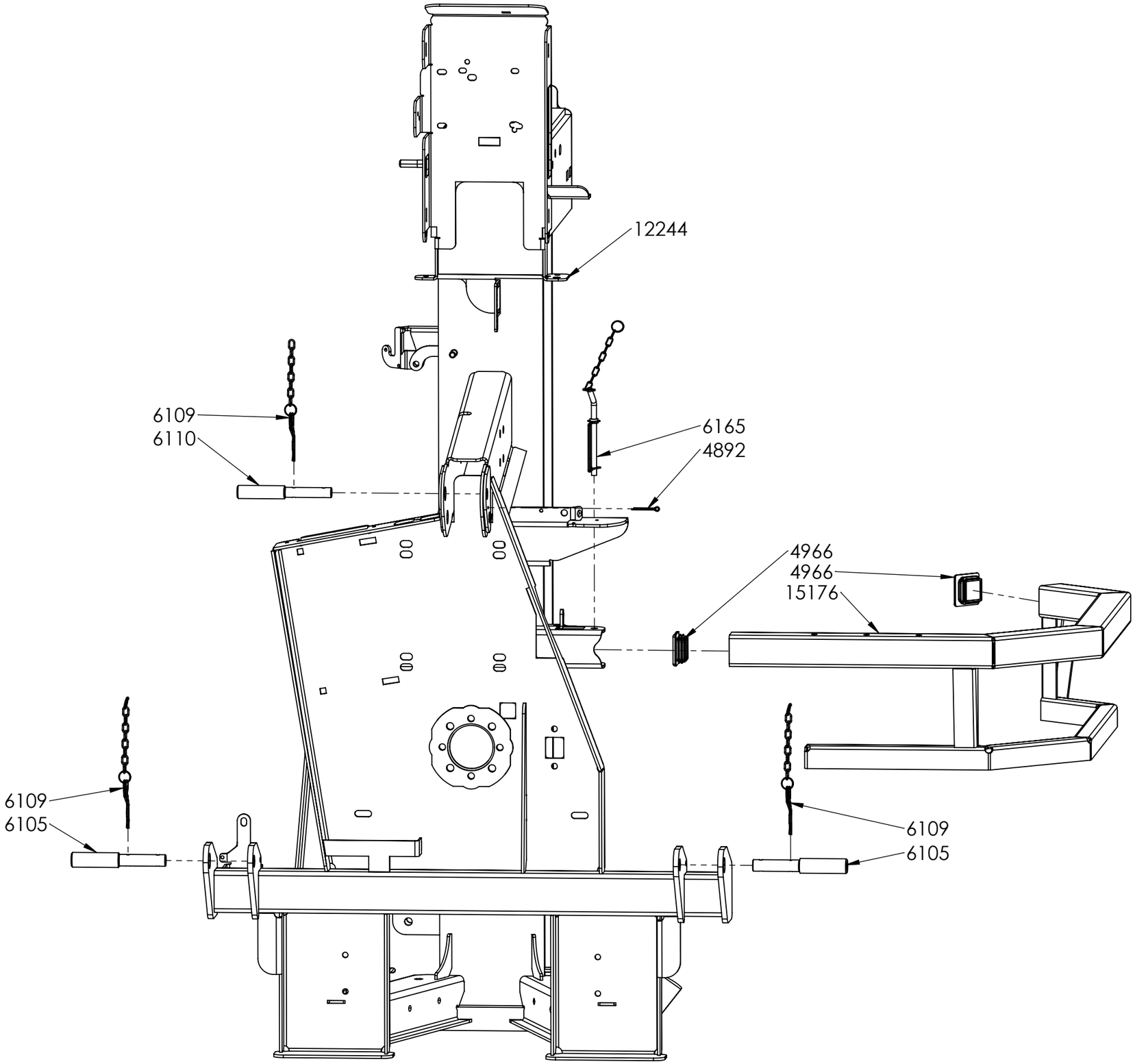

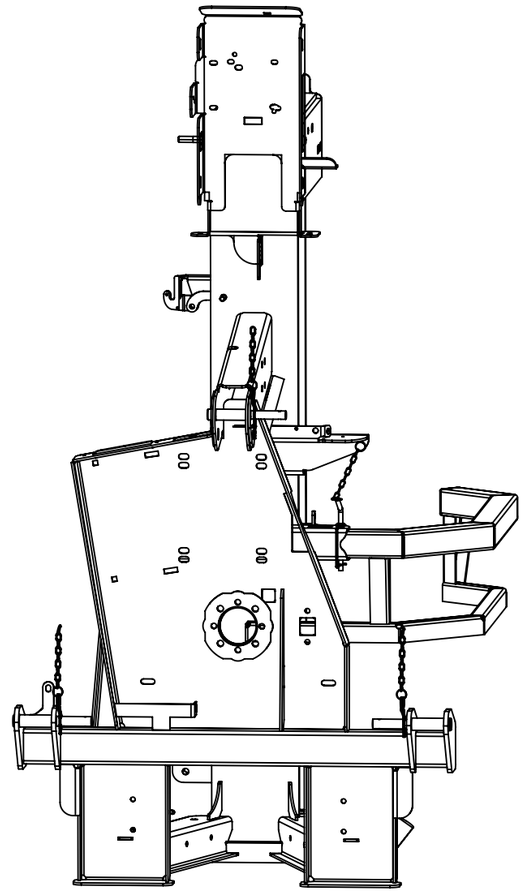

LANCMAN® by GOMARK

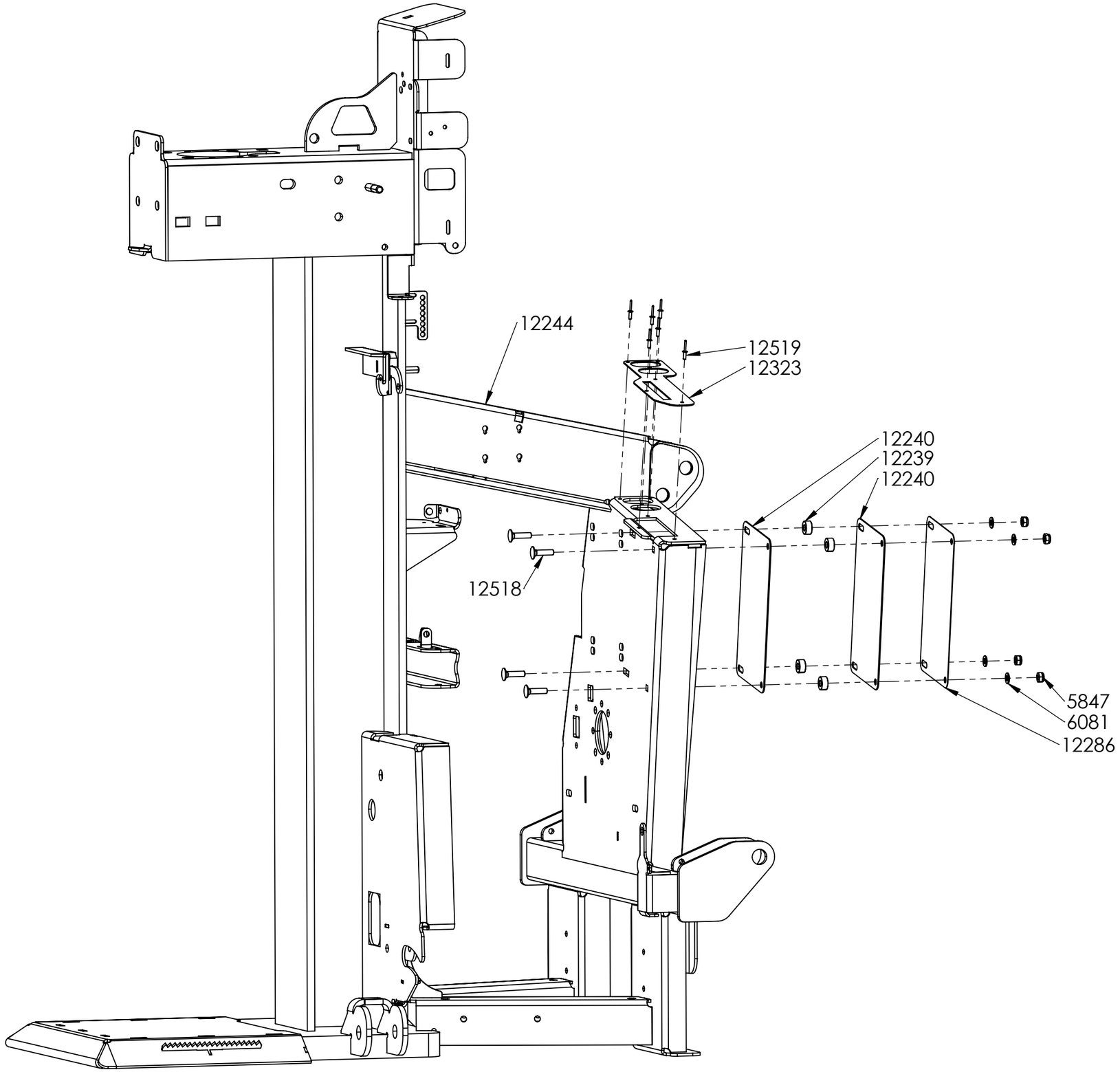

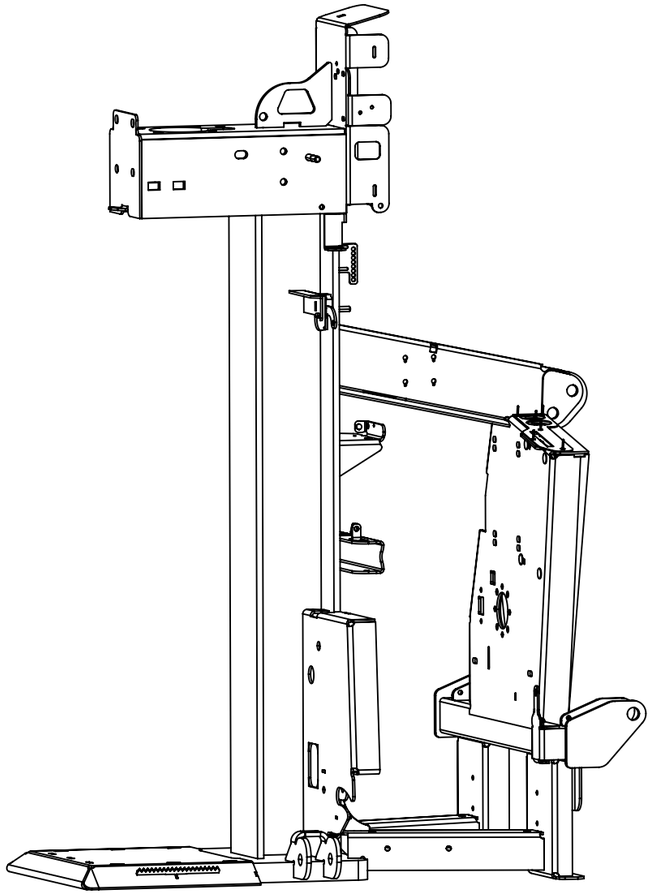

LANCMAN® by GOMARK

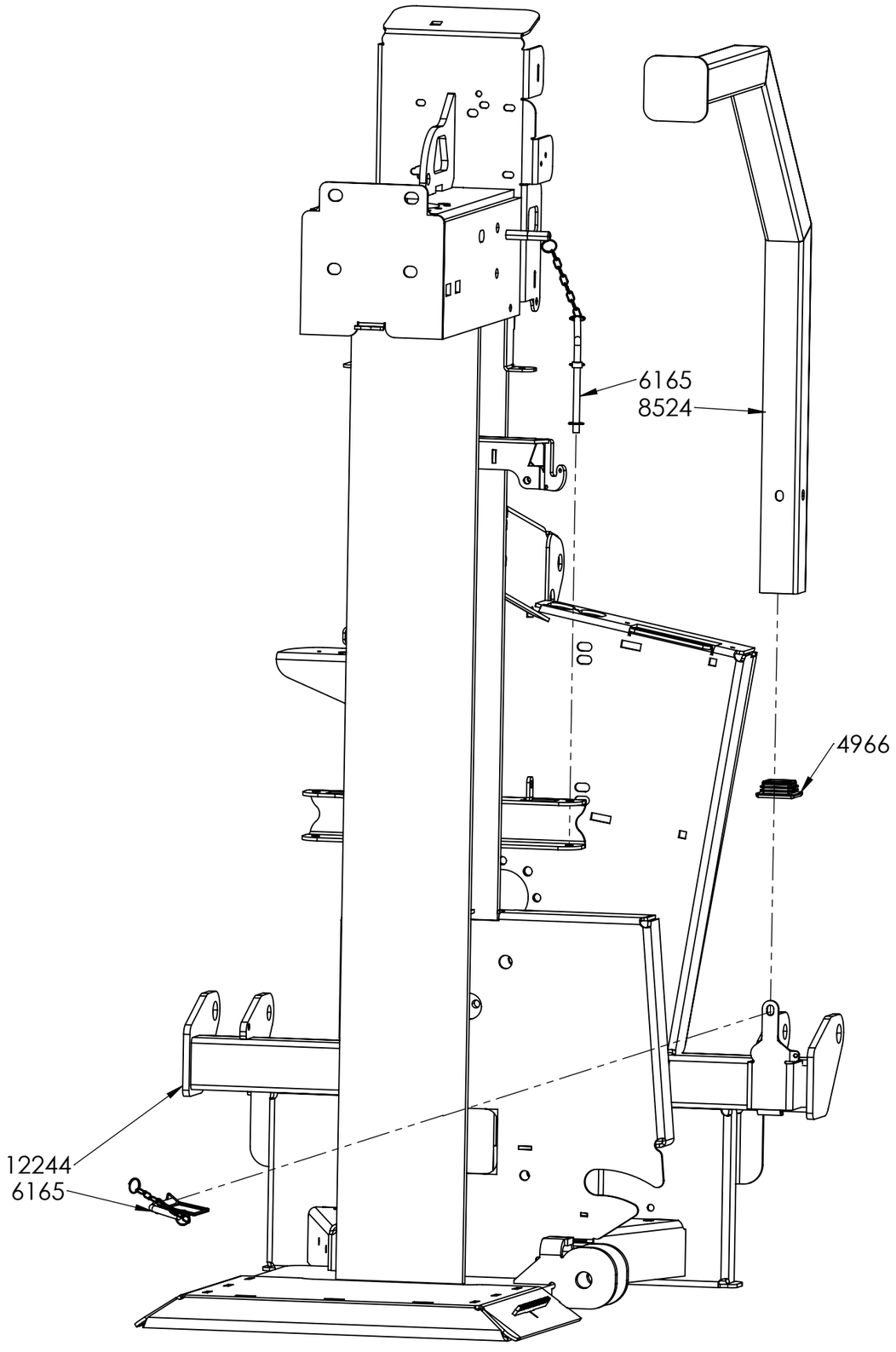

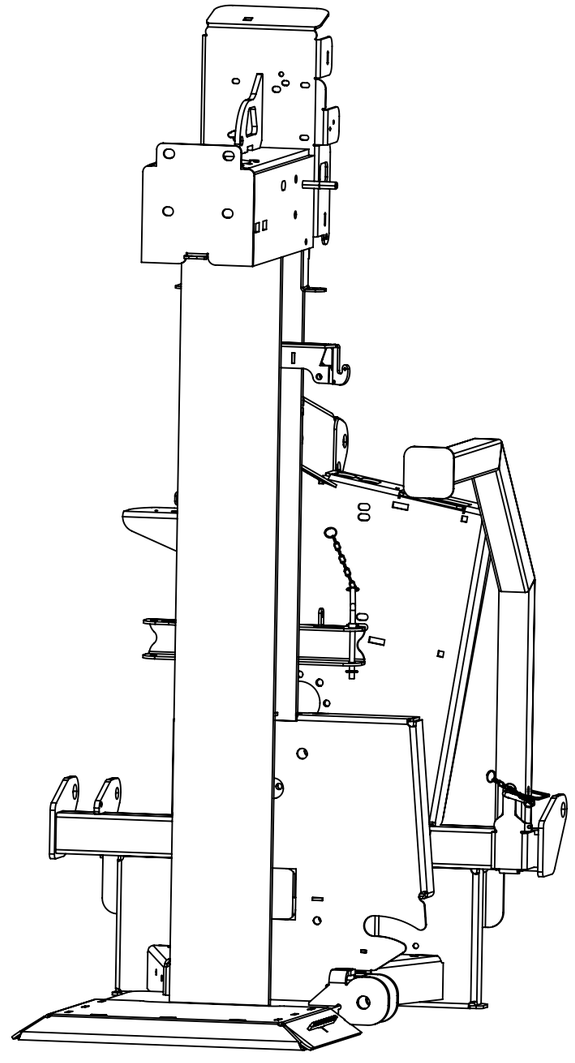

LANCMAN® by GOMARK

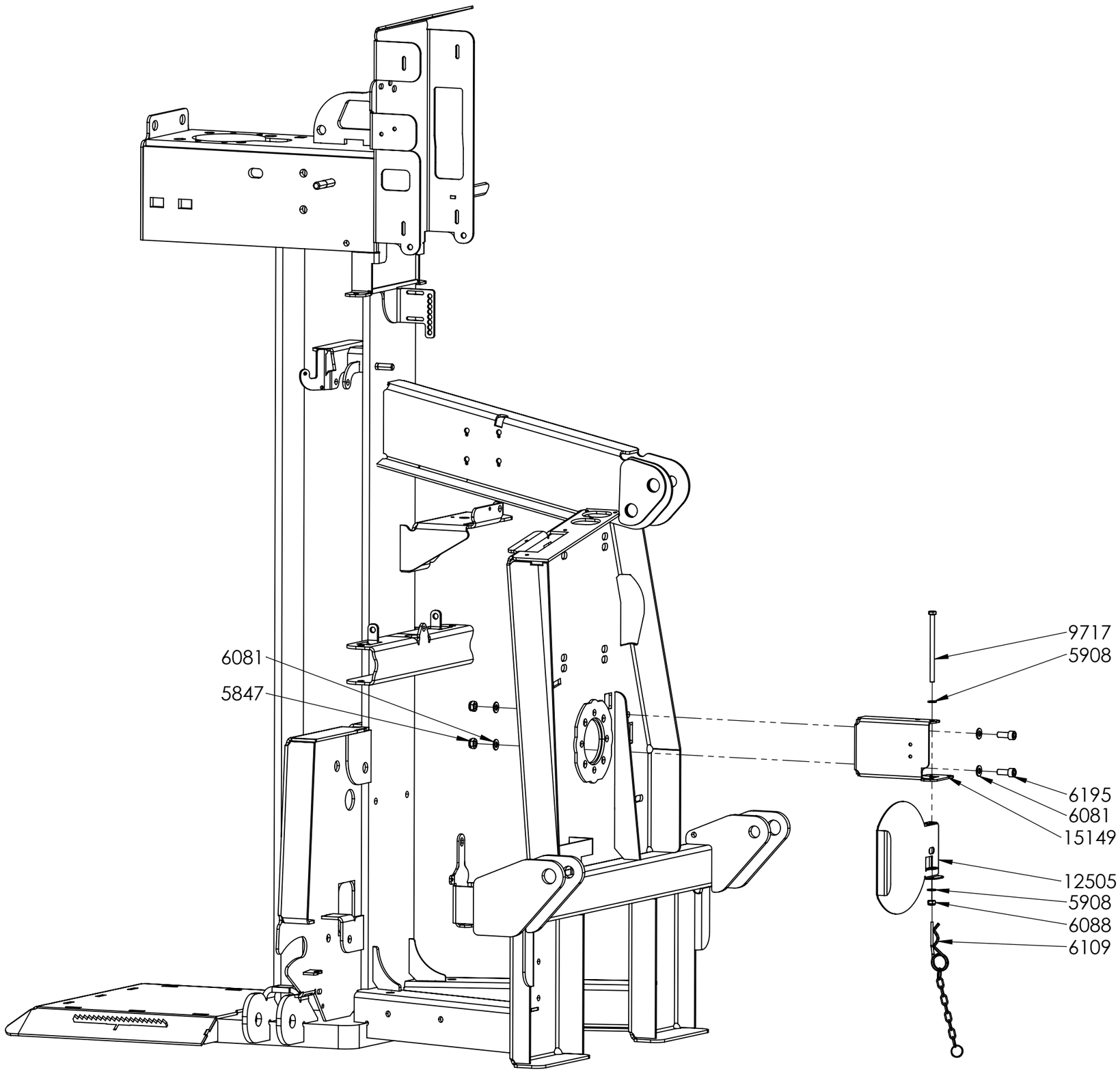

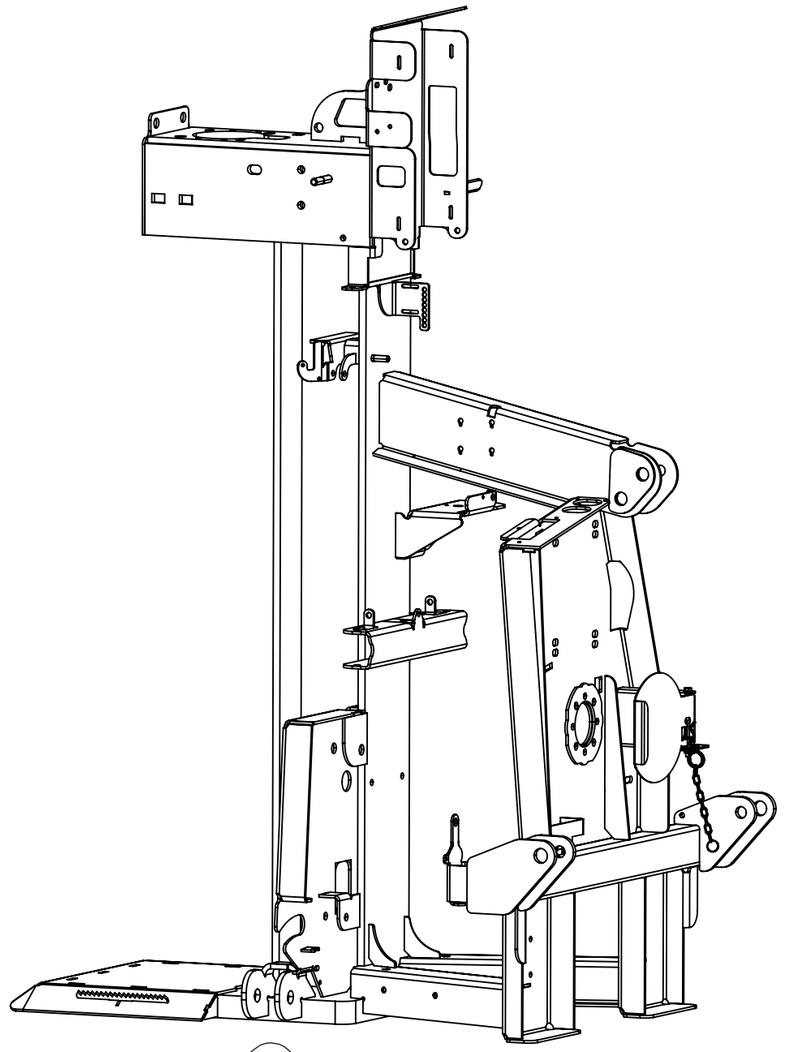

LANCMAN® by GOMARK

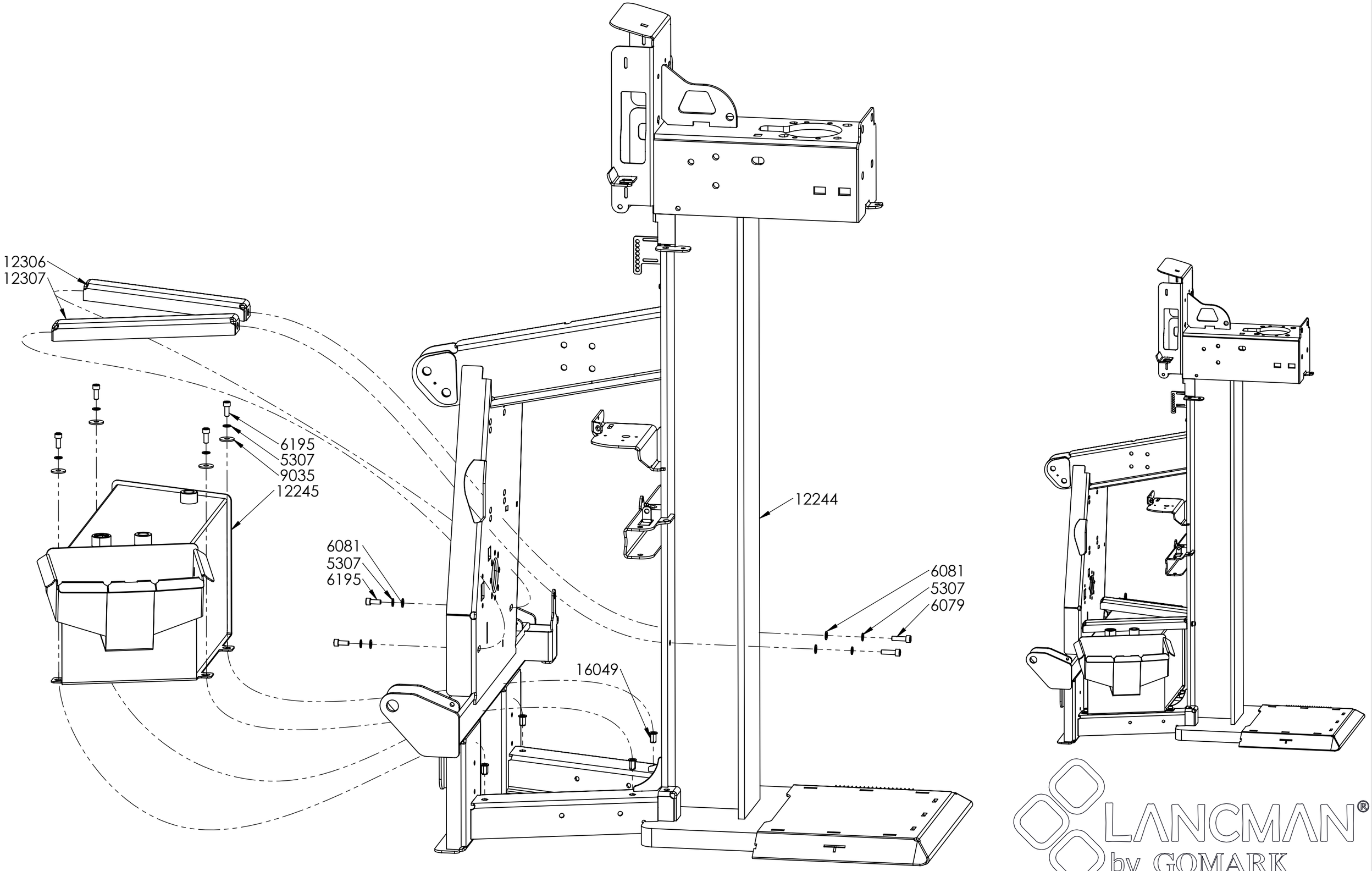
12306
12307
6195
5307
9035
12245
6081
5307
6195
12244
6081
5307
6079
16049

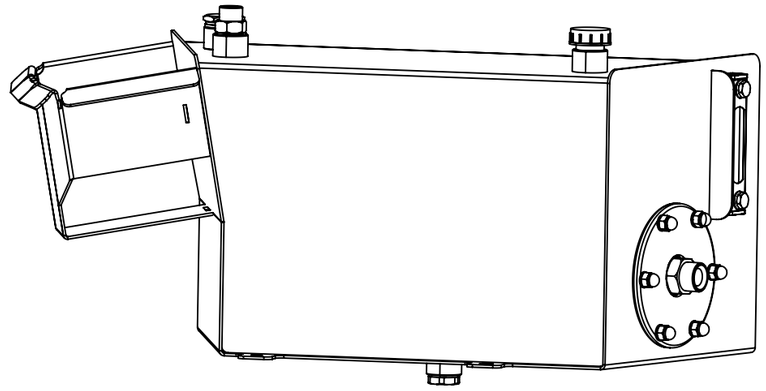

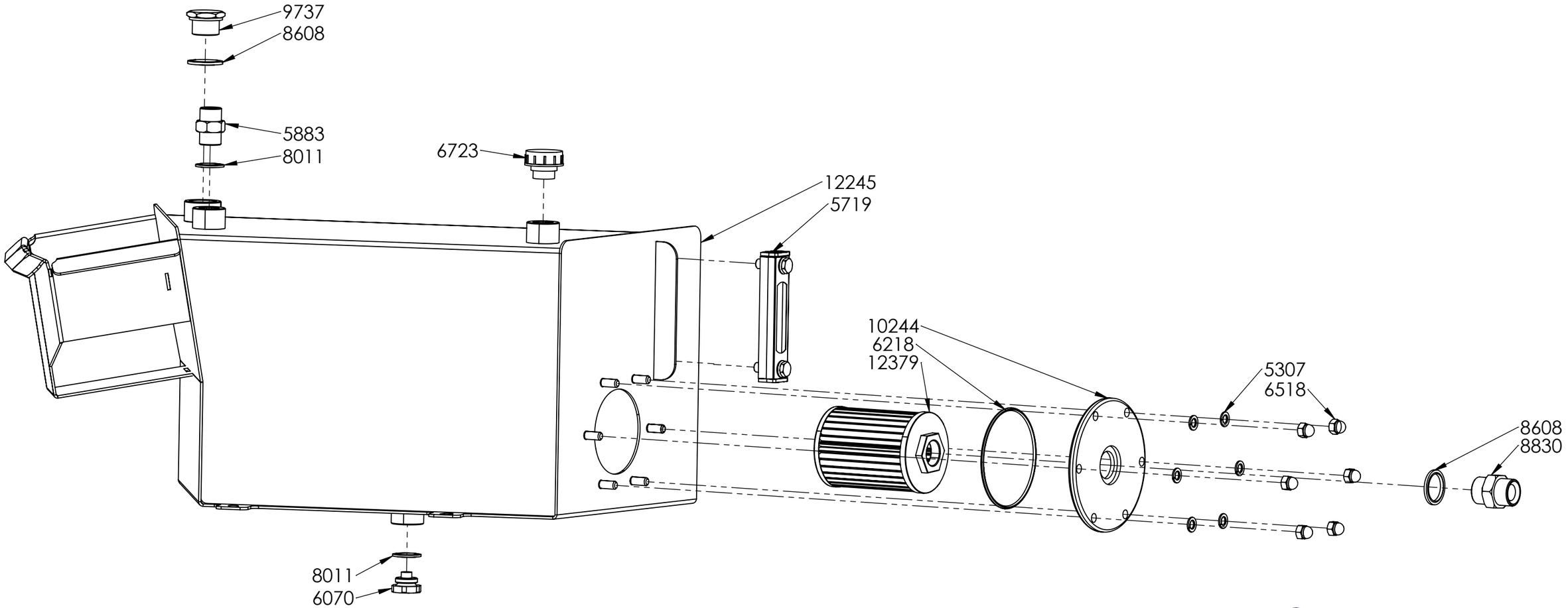

LANCMAN® by GOMARK

STX 26 C MULTISPEED

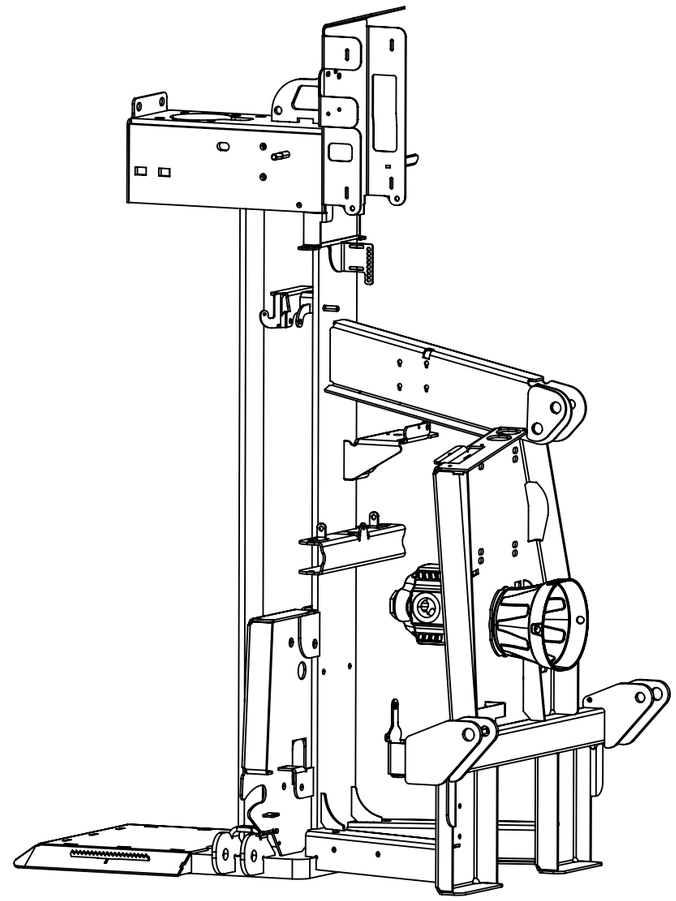

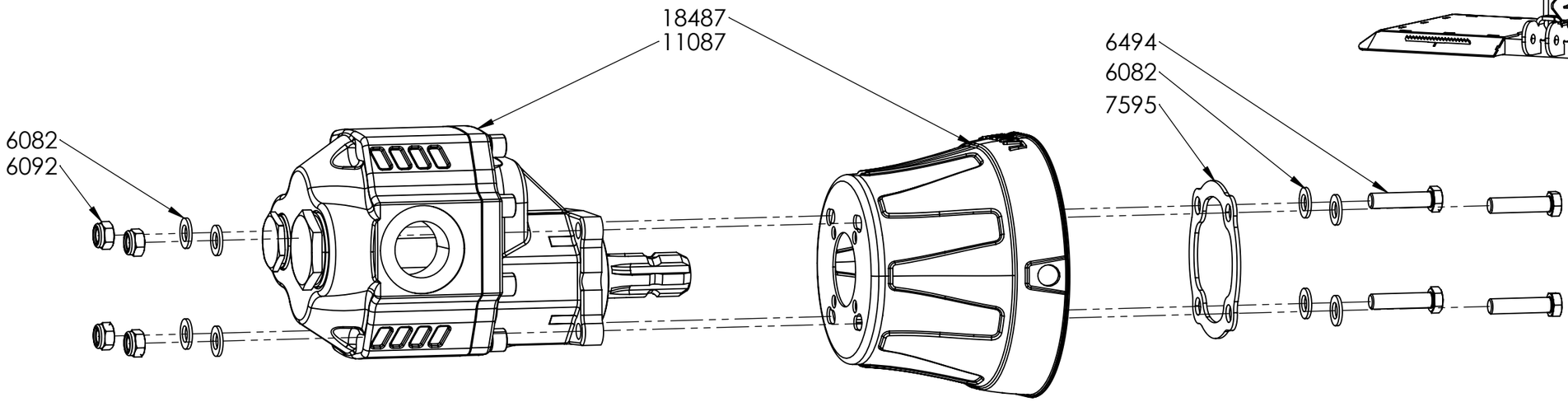

LANCMAN® by GOMARK

STX 26 EL XTREMSPEED MULTISPEED

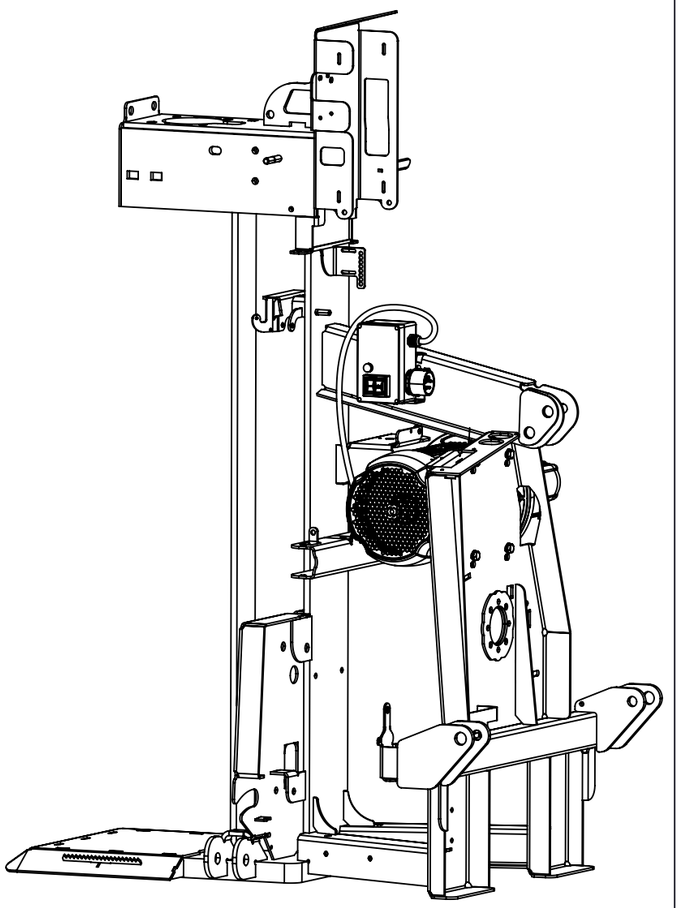

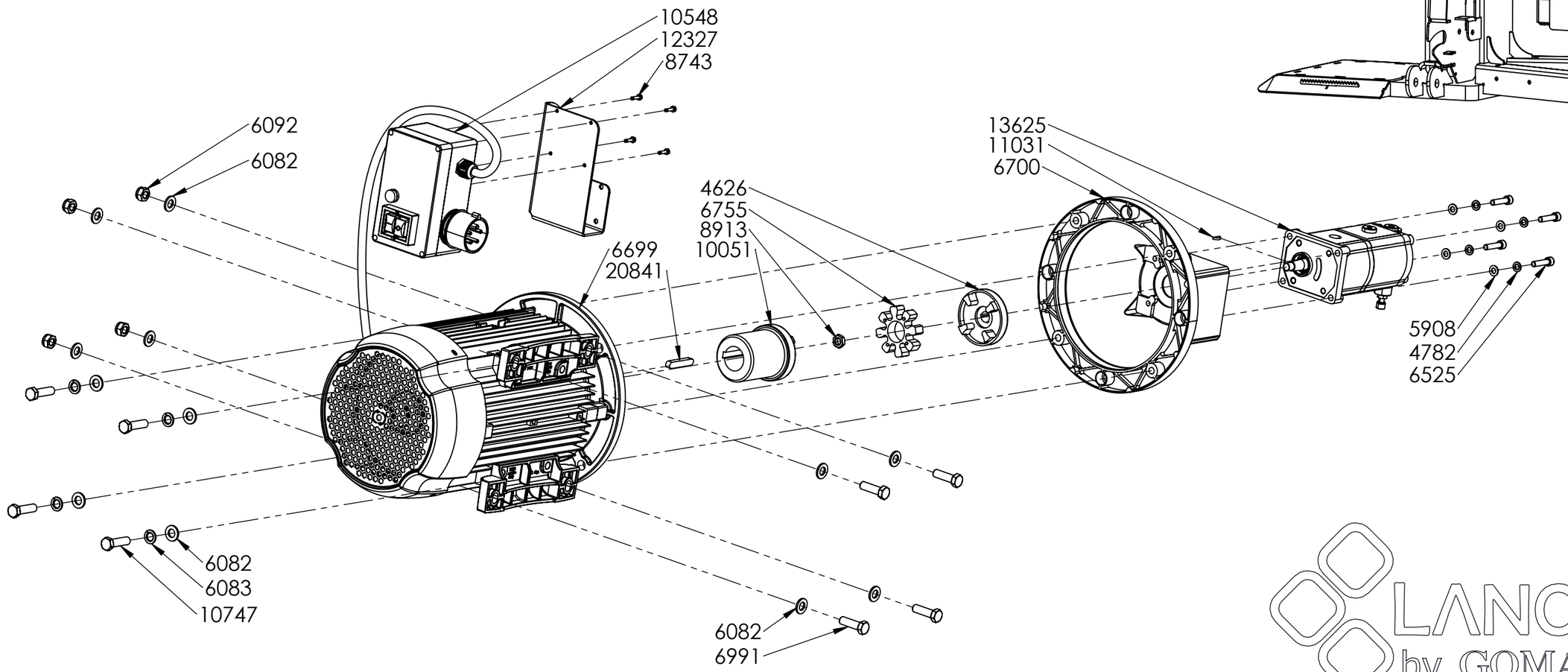

LANCMAN® by GOMARK

STX 26 C GP + EL XTREMSPEED MULTISPEED

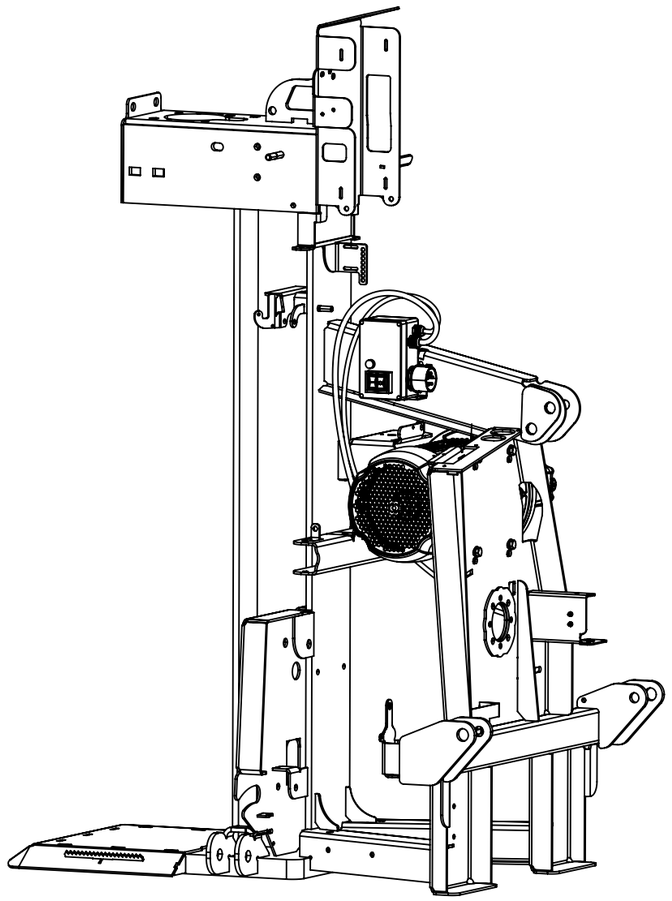

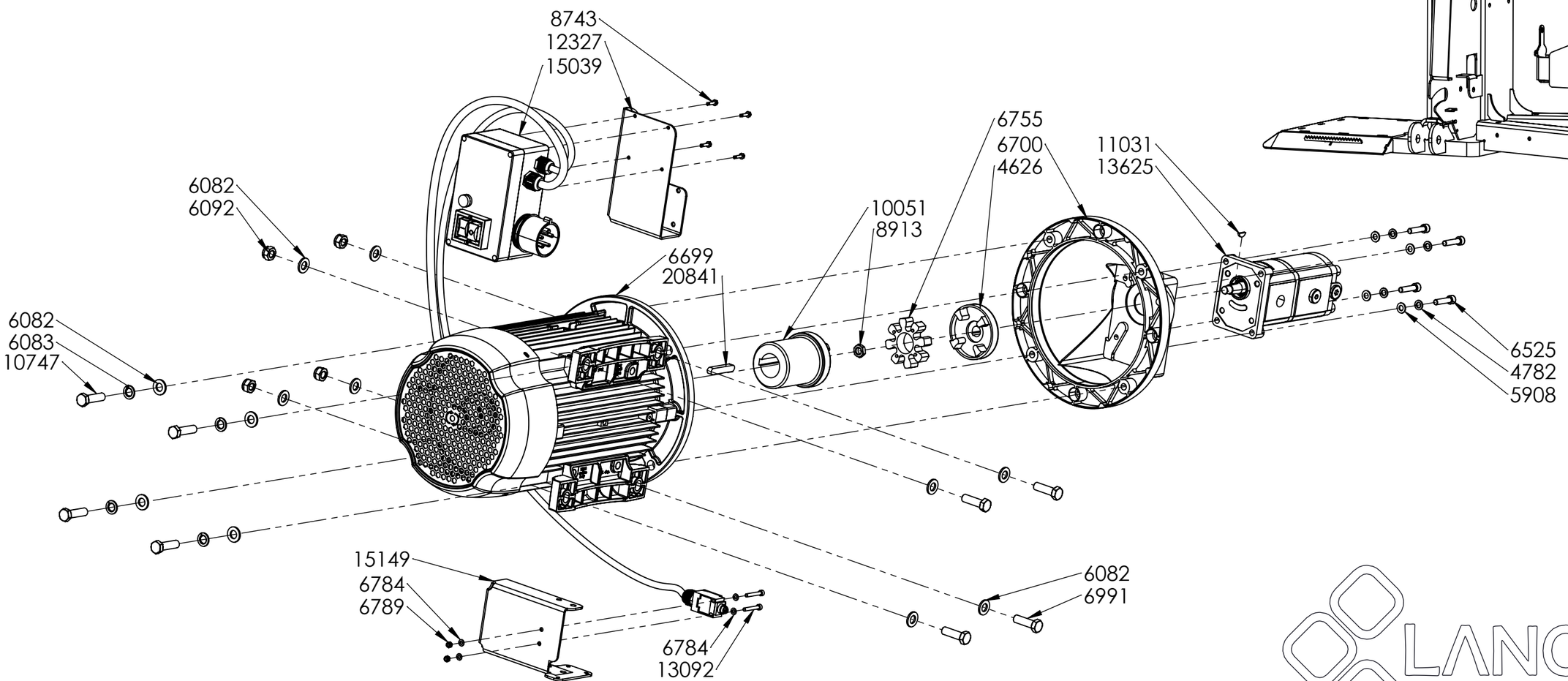

LANCMAN® by GOMARK

STX 26 C GP MULTISPEED

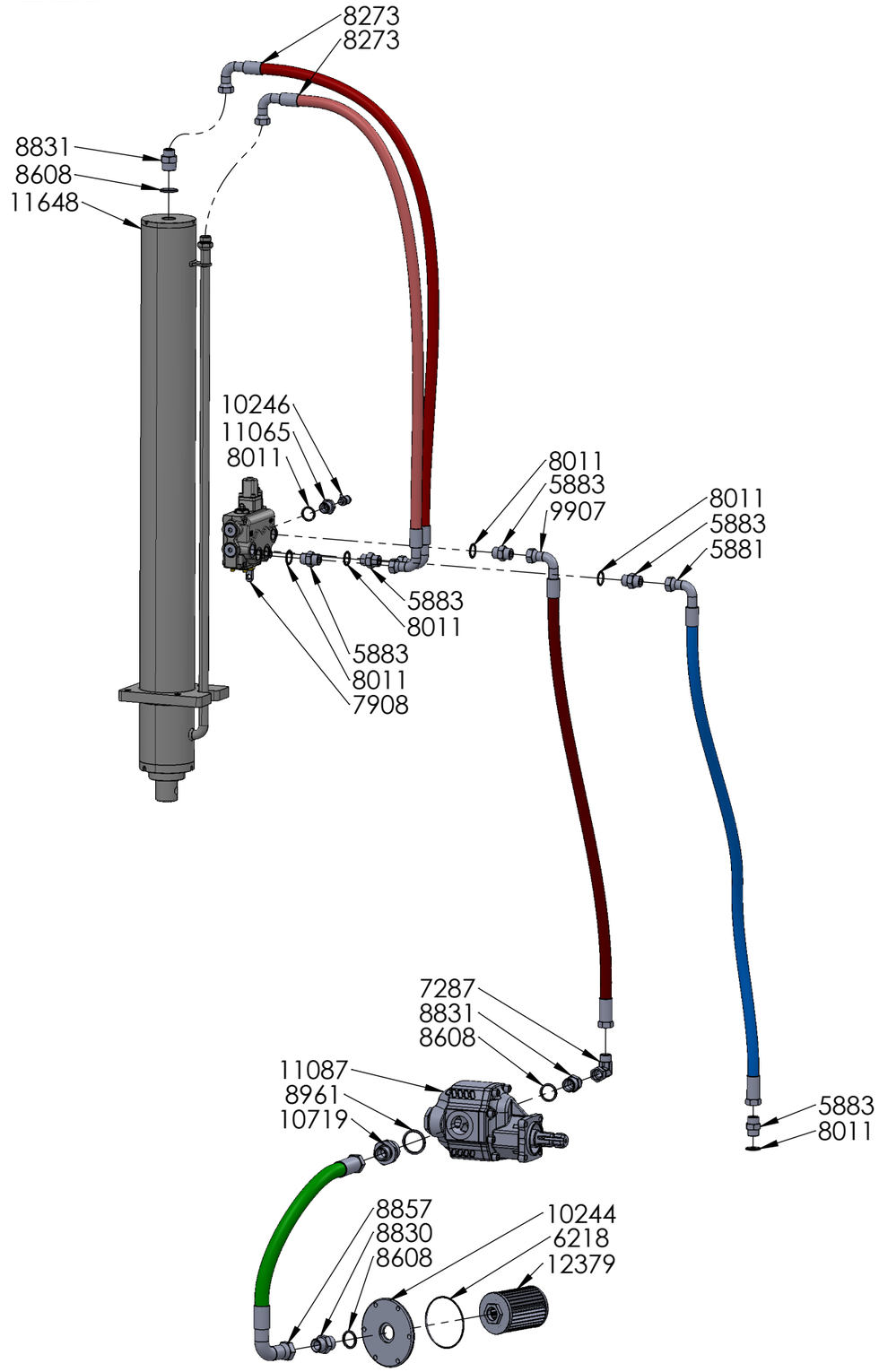

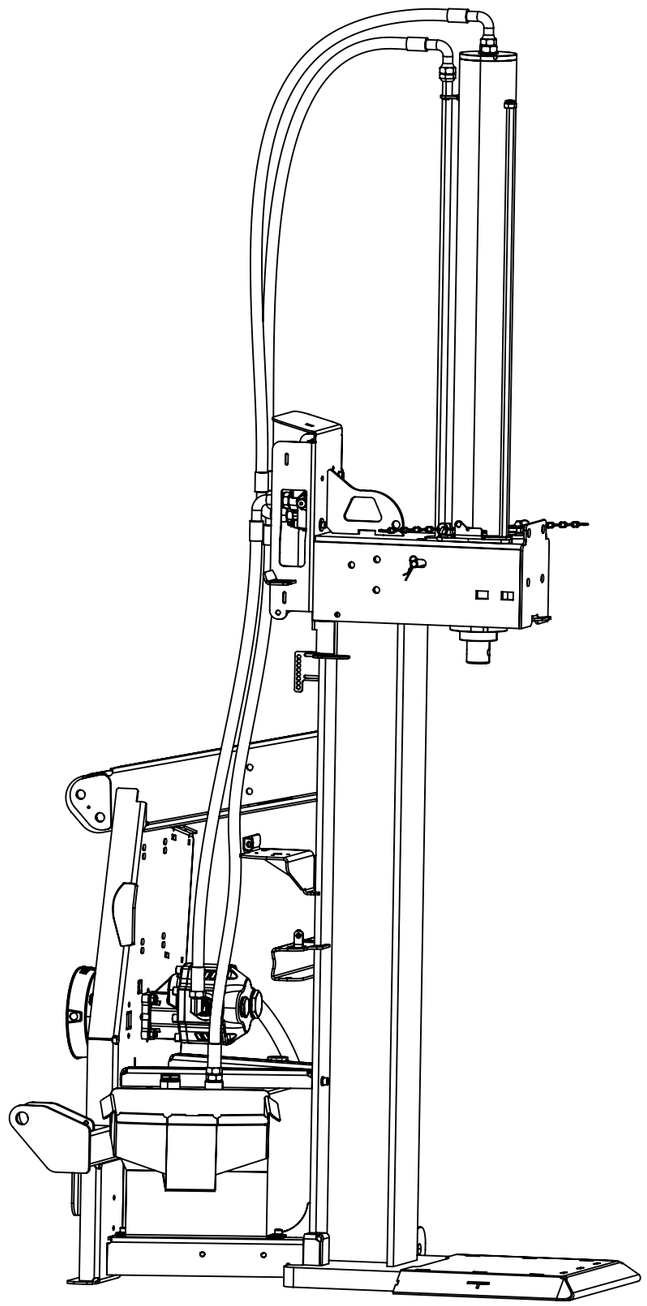

LANCMAN® by GOMARK

STX 26 EL XTREMSPEED MULTISPEED

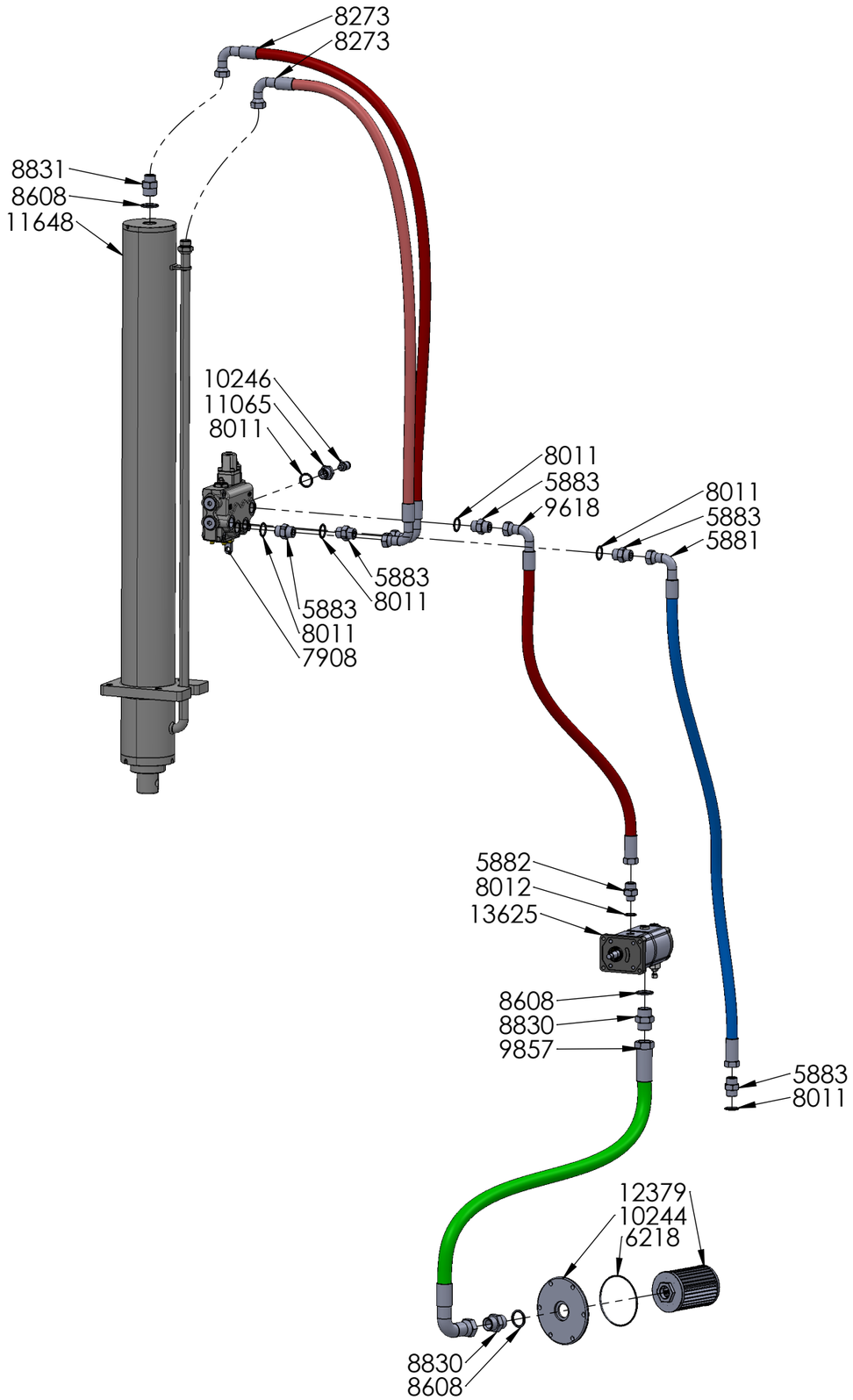

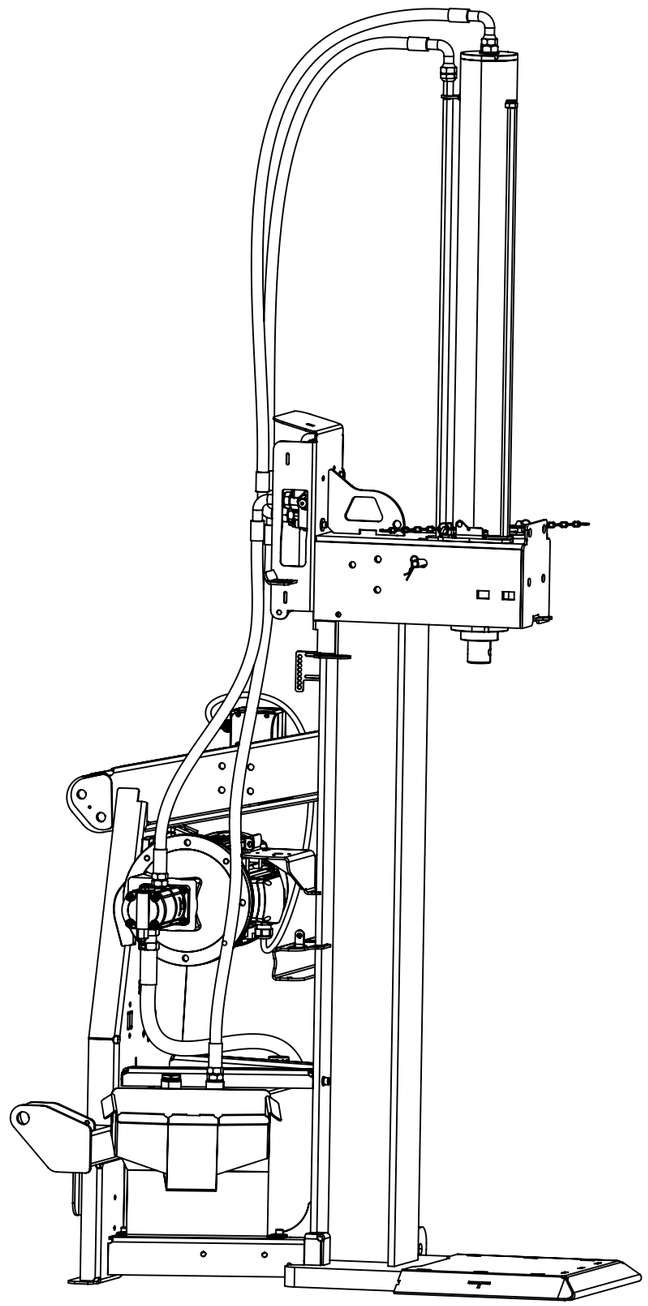

LANCMAN® by GOMARK

STX 26 C GP + EL XTREMSPEED MULTISPEED

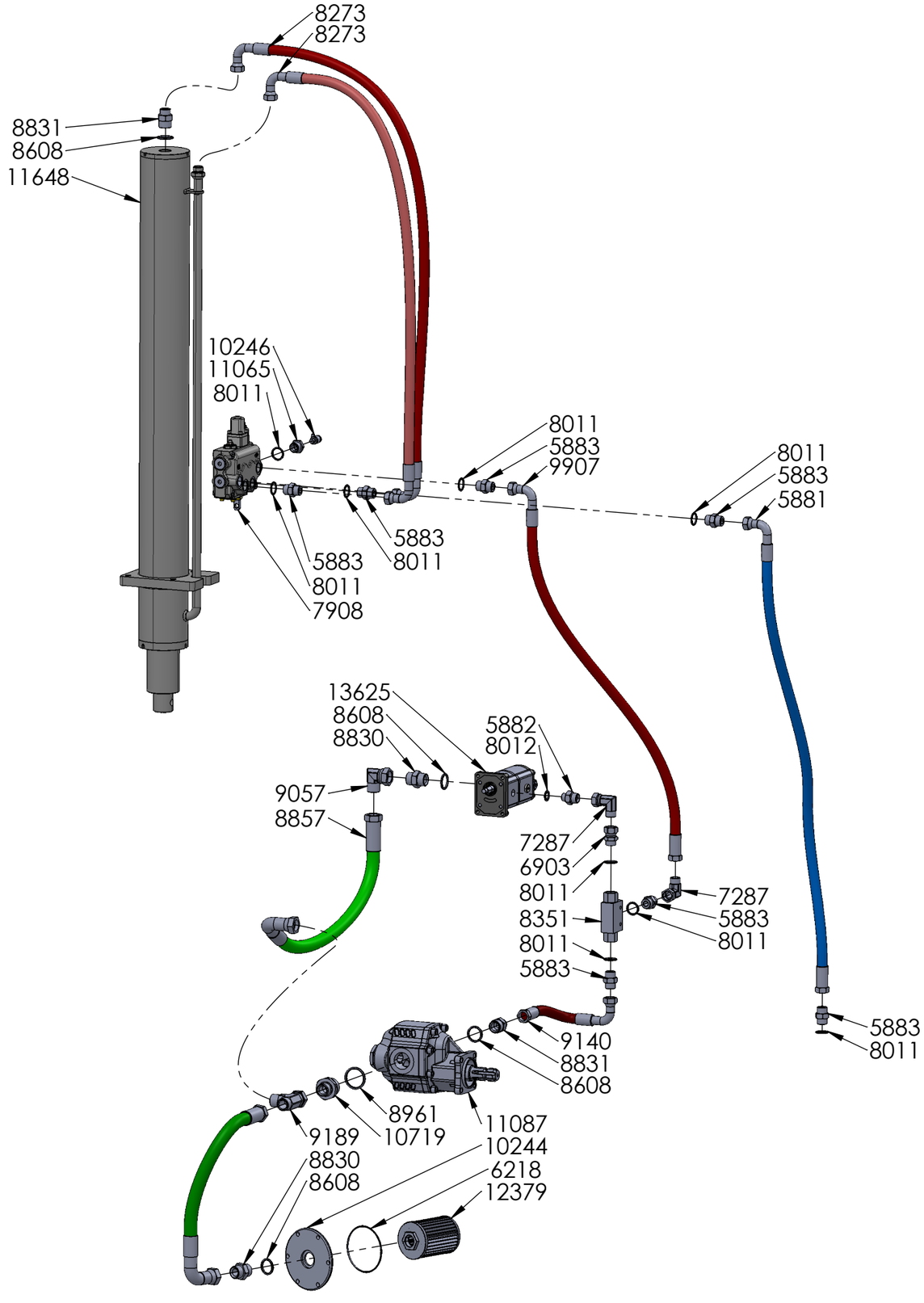

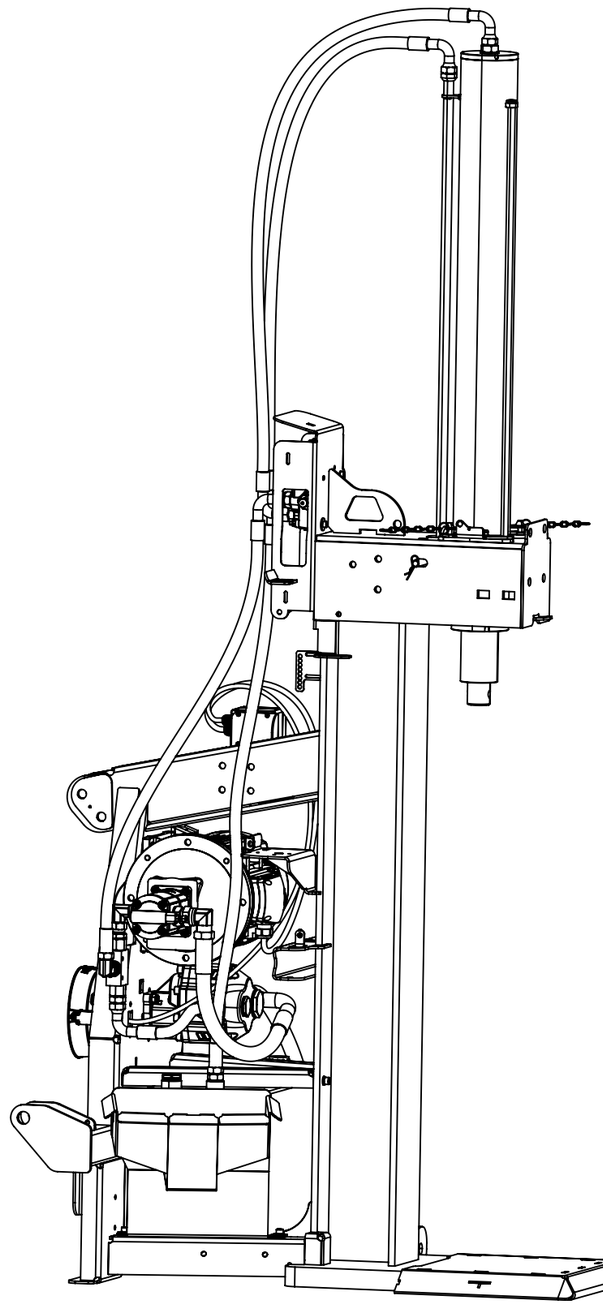

LANCMAN® by GOMARK