ID: 19553

ENG

CIRCULAR SAW LANCMAN

SAF-X-CUT AUTOMATIC 707

Type: STR, STEL, STR+EL

V: 1.7





CE

USER'S MANUAL

LANCMAN® by GOMARK

GOMARK d.o.o.

Čeplje 56,
SI-3305 Vransko, Slowenien
http://www.LANCMAN.si

The user manual is the intellectual property of the company GOMARK d.o.o. Therefore, any reproduction and copying of the instructions without the owner's prior knowledge is a crime.

Issued in JANUAR 2024, contains a declaration of conformity.

WARNING
THIS MACHINE CAN ONLY BE OPERATED
BY A PERSON WHO IS FAMILIAR WITH
THE USER'S MANUAL AND
SAFETY WARNINGS!

IF THE PRODUCT IS
HANDED OVER TO A THIRD PARTY, IT IS REQUIRED
THAT YOU HAND OVER THE INSTRUCTIONS
FOR THE SAFE USE, MAINTENANCE
AND PERFORMING AN INSPECTION OF THE MACHINE.

TABLE OF CONTENTS

DECLARATION OF CONFORMITY 4
WARRANTY TERMS AND CONDITIONS 5
1. TO THE BUYER - USER 6
2. DISPOSAL 6
3. SERVICING AND ORDERING OF SPARE PARTS 6
4. TECHNICAL INFORMATION AND DESCRIPTION OF THE MACHINE 7
4.1 Technical information – SAF-X-CUT AUTOMATIC 707/4 7
4.2 Technical information – SAF-X-CUT AUTOMATIC 707 /5 8
4.3 Description of the machine 9
5. MARKING AND IDENTIFICATION 10
5.1 Picture with identification data on the machine and location of the plate 10
5.2 Warning signs - PICTOGRAMS 10
6. START, STOP 15
6.1 Tractor drive, model STR and STR+EL 15
6.2 Electric drive - STEL 16
6.3 Combine drive STR+EL 17
6.4 Start 18
7. PREPARATION AND WORKING WITH SAF-X-CUT 20
7.1 Preparation 20
7.3 Working with circular saw SAF-X-CUT AUTOMATIC 22
7.3 Length adjusting 23
7.5 Suction connection for saw dust 23
8. MAINTENANCE 24
8.1 Break with clutch 24
8.2 Strap transmission 24
8.3 Angle transmission of the PTO drive 24
8.4 Hydraulic system 24
8.5 Change of oil in the hydraulic system 25
8.6 Maintenance of the oil filter 25
8.7 Other parts 25
8.8 Saw blade 25
8.9 Attaching the saw blade onto the spindle 26
8.10 Changing the saw blade. 26
9. TRANSPORT AND STORAGE 27
10. TROUBLESHOOTING 27
10.1. Help by electronics guides - alrets 27
10.2 Instructions for other problems 29
11. WEARABLES PARTS OF THE SAF-X-CUT AUTOMATIC CIRCULAR SAW 29
12. HYDRAULIC AND ELECTRIC SCHEME 30
12.1 Hydraulic scheme for LANCMAN SAF-X-CUT AUTOMATIC 30
12.2 Electric scheme for LANCMAN SAF-X-CUT AUTOMATIC 31
12.3 Electric scheme for LANCMAN SAF-X-CUT AUTOMATIC 707 STEL/ STR + EL 33

DECLARATION OF CONFORMITY

CE

EC DECLARATION OF CONFORMITY OF THE MACHINE Nr. 02/SAF-X-CUT ATM

The producer GOMARK d.o.o., Čeplje 56, 3305 VRANSKO declares that the machine stated below has been planned and constructed in accordance with the EC directives listed in the table below. This statement does not apply to unauthorized changes to the machine.

CIRCULAR SAW WITH COVEYOR BELT LANCMAN™

SAF-X-CUT AUTOMATIC 707

Type: STR, STEL, STR+EL

Test report: T211-0982/19, Notified Body: 1304-SIQ

Serial number: on the plate of the machine.
Production date: on the plate of the machine.

The machine is made in compliance with requirements of the following regulations:

EC-DIRECTIVE	HARMONISED EUROPEAN STANDARDS
EC-MACHINE-DIRECTIVE 2006/42/EC	EN ISO 12100:2010
EC-LOW-VOLTAGE-DIRECTIVE 2006/95/EC	EN 1870-6:2017
EC-ELECTROMAGNETIC COMPATIBILITY 2004/108/EC	EN ISO 4413:2010
	EN 620:2002+A1:2010

Measured sound pressure level at the workplace	L_{PA}=95,3 dB
Guaranteed sound power level	L_{WA}=113 dB

The values shown in the table have been obtained by using electrical drive, keep in mind that real values are determined with the tractor emissions as well. The figures shown represent emission levels which do not necessarily reflect safe work levels. Even though there is a correlation between emission levels and exposure levels, this is not sufficient to determine whether further precautions are needed or not. The factors which influence the effective exposure level of the operator include the characteristics of the work environment, noise sources, etc. such as the number of machines and the carrying out of various procedures. In addition, the admissible exposure level may vary from country to country.
In any case, this information will give the user of the machine the opportunity to assess risks and dangers to a better extent.

Responsible for the technical documentation:

Gomark d.o.o.
Čeplje 56, SI-3305 Vransko

Čeplje, 04.01.2024

GOMARK
trgovina in proizvodnja, d.o.o.
Čeplje 56, SI-3305 VRANSKO

Person liable:
Matjaž GOSAK

WARRANTY TERMS AND CONDITIONS

The warranty applies to machines and components - if used properly (as described in the user manual) they will work flawlessly.

Warranty period:

- **for home use: 24 months,**
- **for professional use: 12 months (industry).**

The warranty covers replacement of defective parts and repair work but excludes transport fees. Warranty applies only with a correctly completed warranty certificate and receipt of purchase.

The warranty is voided if:
- failure to comply with the user's manual,
- if it is found that a pre-repair was carried out by an unauthorized person,
- if non-original spare parts were built in,
- if the product was used in a negligent manner,
- due to failures, made by mechanical blows caused by the buyer or a third person.

The warranty does not apply for expendable materials, stated in the instructions.

The warranty does not apply in the case of failure to comply with the user's manual which is an integral part of the machine. Warranty also does not apply in case of unauthorized repairs to the machine and changes of the machine.

Warranty repairs are carried out by the authorized service stated by your dealer or dealer who sold you the machine.

1. TO THE BUYER - USER

Dear buyer,
We thank you for the confidence you have shown us by buying our product. We are confident that you will be satisfied with it. Before you first use the machine carefully read and learn the instructions on the safe use and maintenance, description of the intended function, functionality and working environment of the machine. The instructions are designed to introduce all the required activities prior to the first use of the machine, maintenance and carrying out regular inspections.
If you hand over the product to a third party, you also must hand over the instructions for safe use, maintenance and performance of regular inspections.
When reading the instructions, please pay special attention to the chapters and paragraphs, marked with the following symbol.



This symbol especially emphasizes the importance of that text in the specific chapter of the instructions.

We reserve the right to design changes and make technical improvements.
Any partial or total reproduction of these instructions, text or images is a criminal act.

2. DISPOSAL

The mechanical SAW WITH CONVEYOR BELT, intended for transverse sawing only (without nails, screws etc.), has a maximum length of 118 cm. The diameter of the wood must be at least 5 cm and 35 cm at the most, Round wood up to 25 cm. Irrespective of the diameter of the wood you may not put more than 1 piece of wood on the cantilever table at a time. Any other use is considered improper. The damage caused by improper use is the RESPONSIBILITY OF THE USER ONLY.
Wood for sawing must be stored near the usual working place of the user of the machine
The user must consider security, working and maintenance instructions as well as dimensions stated under technical data. It is prohibited to saw wood without the cantilever table
The machine may be used, handled and repaired only by a person who is familiar with the machine and hazards. The right position for sawing is always directly behind the handle of the cantilever table. In other positions the user bears the risk!
At every working procedure the cantilever table should be placed in the starting position.



Any deviation from the prescribed use is considered ineligible, and the manufacturer is not liable for security and functionality.



Any remodeling and replacement of the original components of the CIRCULAR SAW AND THE CONVEYOR BELT eliminates the warranty of the manufacturer for safety and functionality of the machine.

The machine may be used, handled, and repaired only by adults (at least 18 years old), familiar with the instructions.

3. SERVICING AND ORDERING OF SPARE PARTS

Servicing and elimination of defects within the warranty period and afterwards will be performed direct by your dealer.
For any help you can always turn to the producer:
GOMARK d.o.o.
Čeplje 56, SI-3305 Vransko, Slovenia
Phone: +386 3700 15 03

When ordering spare parts always indicate the following data:
- name of the machine,
- indication of the machine-type,
- serial number of the machine,
- year of manufacture of the machine.

All information for the ordering of the spare parts is written on the plate or. permanent label on the machine.

4. TECHNICAL INFORMATION AND DESCRIPTION OF THE MACHINE

4.1 Technical information – SAF-X-CUT AUTOMATIC 707/4

LANCMAN SAW	***STR 4***	***STEL 4***	***STR+EL 4***
DIMENSIONS (HxWxL)	2460/4360×1800×1700 mm		
SUITABLE SAW BLADE (Ø)	700 mm AXLE 30 mm		
RECOMMENDED THICKNESS OF THE SAW BLADE:	6 mm		
REVOLUTIONS ON THE SAW BLADE:	1750 rpm @ 350 rpm on PTO	1728 rpm @ 1350 RPM ON electric motor	1750/1728
Multiplied number:	1:5	1:1.28	1:5 1:1.28
Weight:	670 kg	675 kg	695 kg
Angle:	34°		
Adjustable cutting length:	15 cm/20cm/25cm/30cm/33cm/50cm or from 15-52 cm (with screwing)		
Dust connector (Ø):	140 mm		
DRIVE			
Drive/connector category:	PTO/Cat. I/II	ELECTR. 5-POL/16A	PTO/Cat. I/II + ELECTR. /5-POL/16 A
Electric power supply for electronics:	**12 V/5 A**	**12V/5A, WITH THE ELECTRIC DRIVE POWER SUPLY INQLUD**	**12V/5A, WITH THE ELECTRIC DRIVE POWER SUPLY INQLUD**
Energy use P1:	12 kW	400V/ 7.5Kw	12kW// 400V/ 7.5Kw
MAX revolutions:	400 rpm	1440 rpm	400 rpm/ 1440 rpm
Hydraulic oil:	SVG 32/20 ltr	SVG 32/ 20 ltr	SVG 32/ 20 ltr
Suction filter:	60MIC 1'' FI100X143		
Max. pressure in the system:	190 bars		
Drive type:	PTO shaft/ drive of the saw blade using strap/hydraulic using pump with its own oil tank	Electro-motor drive of the saw blade using strap/hydraulic using pump with its own oil tank	Combine drive von electric and drive
Angle transmitter/ multiplier:	ANGLE TRANSMISSION / oil SAE 90, 0.6 l	---	ANGLE TRANSMISSION / oil SAE 90, 0.6 l
Belt transmission-belts:	2×AVX 13×1.550 LA	2×AVX 13×1.075 LA	2×AVX 13×1.550 LA 2×AVX 13×1.075 LA
Hydraulic pump – drive:	2×AVX 13×800 LA	2×AVX 13×800 LA	2×AVX 13×800 LA
Data for operation / Cutting height			
Min. thickness of the wood Ø:	5 cm		
Max. thickness of the wood Ø:	24 cm		
Max. length of wood	118 cm		
Conveyor belt			
Length in working position:	400 cm/width 43 cm		
Conveyor – transportation height:	2.25 m with a 33 ° incline of the conveyor belt 2.74 m for the 45 ° incline of the conveyor belt		
Drive of the conveyor belt:	hydraulic motor		
Drive of the telescope:	telescopic cylinder		
Positioning LEFT/RIGHT:	hydraulic cylinder		

4.2 Technical information – SAF-X-CUT AUTOMATIC 707 /5

LANCMAN SAW	*STR 5*	*STEL 5*	*STR+EL 5*
DIMENSIONS (HxWxL)	2650/5360×1800×1700 mm		
SUITABLE SAW BLADE (Ø)	700 mm AXLE 30 mm		
RECOMMENDED THICKNESS OF THE SAW BLADE:	6 mm		
REVOLUTIONS ON THE SAW BLADE:	1750 rpm @ 350 rpm on PTO	1728 rpm @ 1350 RPM ON electric motor	1750/1728
Multiplied number:	1:5	1:1.28	1:5 1:1.28
Weight:	695 kg	700 kg	720 kg
Angle:	34°		
Adjustable cutting length:	15 cm/20cm/25cm/30cm/33cm/50cm or from 15-52 cm (with screwing)		
Dust connector (Ø):	140 mm		
DRIVE			
Drive/connector category:	PTO/Cat. I/II	ELECTR. 5-POL/16A	PTO/Cat. I/II + ELECTR. /5-POL/16 A
Electric power supply for electronics:	**12 V/5 A**	**12V/5A, WITH THE ELECTRIC DRIVE POWER SUPLY INQLUD**	**12V/5A, WITH THE ELECTRIC DRIVE POWER SUPLY INQLUD**
Energy use P1:	12 kW	400V/ 7.5Kw	12kW// 400V/ 7.5Kw
MAX revolutions:	400 rpm	1440 rpm	400 rpm/ 1440 rpm
Hydraulic oil:	SVG 32/20 ltr		
Suction filter:	60MIC 1'' FI100X143		
Max. pressure in the system:	190 bars		
Drive type:	PTO shaft/ drive of the saw blade using strap/hydraulic using pump with its own oil tank	Electro-motor drive of the saw blade using strap/hydraulic using pump with its own oil tank	Combine drive von electric and drive
Angle transmitter/ multiplier:	ANGLE TRANSMISSION / oil SAE 90, 0.6 l	---	ANGLE TRANSMISSION / oil SAE 90, 0.6 l
Belt transmission-belts:	2×AVX 13×1.550 LA	2×AVX 13×1.075 LA	2×AVX 13×1.550 LA 2×AVX 13×1.075 LA
Hydraulic pump – drive:	2×AVX 13×800 LA	2×AVX 13×800 LA	AVX 13×800 LA
Data for operation / Cutting height			
Min. thickness of the wood Ø:	5 cm		
Max. thickness of the wood Ø:	24 cm		
Max. length of wood	118 cm		
Conveyor belt			
Length in working position:	500 cm/ width 43 cm		
Conveyor – transportation height:	2.75 m with a 33 ° incline of the conveyor belt 3.45 m for the 45 ° incline of the conveyor belt		
Drive of the conveyor belt:	hydraulic motor		
Drive of the telescope:	telescopic cylinder		
Positioning LEFT/RIGHT:	hydraulic cylinder		

4.3 Description of the machine

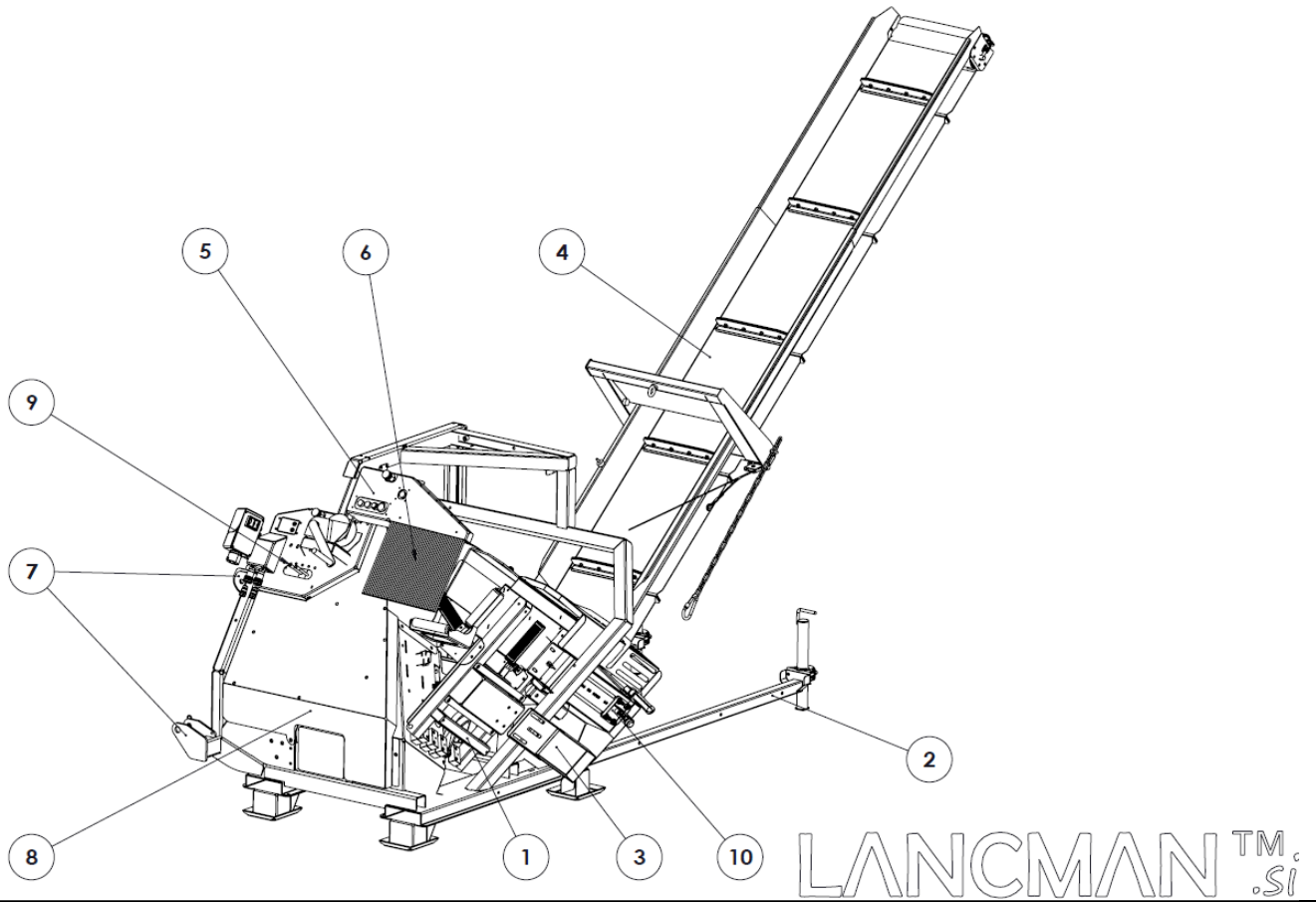

1- PIVOTING TABLE
2- TELESOPIC FEET
3- 2x PIVOTING TABLE EXTENSIONER
4- TELESCOPIC CONVEYOR BELT
5- HYDRAULIC CONTROL PANEL
6- PROTECTIVE COVER OF THE SAW BLADE
7- 3-PT- CONNECTION
8- TRANSMISSION SYSTEM PROTECTIVE COVER
9- HYDRAULIC CONTROL PANEL FOR CONVEYOR BELT
10- LENGTH STOP WITH CONTACT SWITCH

The circular saw has a strong metal carrier frame, cantilever table, protective cover of the saw blade, conveyor belt and hydraulics.

The saw includes the following wrenches for securing the saw blade (assembly/disassembly of the saw blade):

A-wrench size 48, B- wrench size 30



5. MARKING AND IDENTIFICATION

5.1 Picture with identification data on the machine and location of the plate

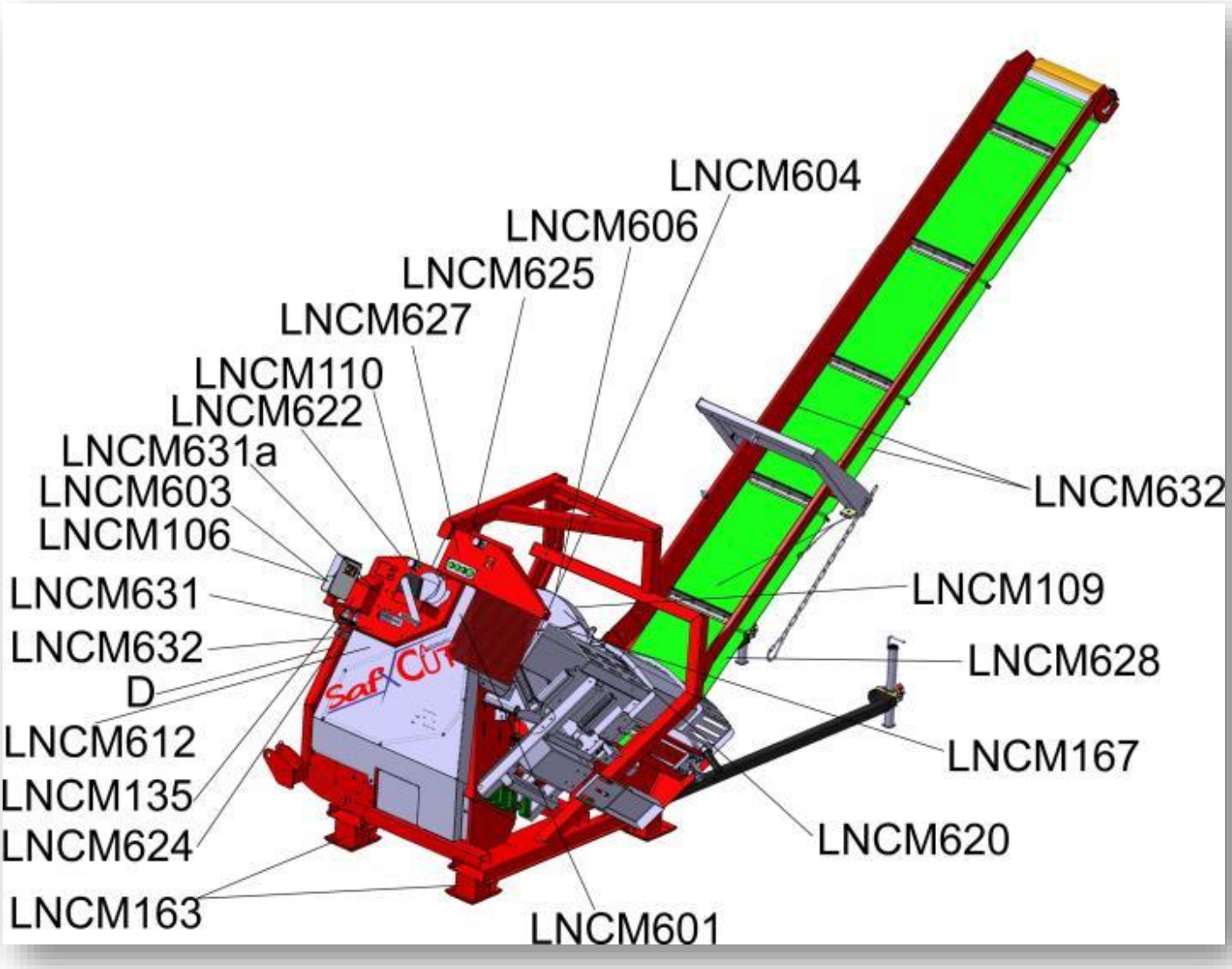

5.2 Warning signs - PICTOGRAMS

Warning signs, placed on the circular saw, are warning the workers of the dangers, which may occur when using the circular saw (each pictogram is placed once only).

DECL.	**CIRCULAR SAW LANCMAN** Typ: **SAF-X-CUT AUTOMATIC 707 STR/5m (14986)** Input power: **12 kW** Max RPM: **350 /min** Max.RPM on BLADE: **2700 /min** Max.pressure: **230 bar** Axle: **30 mm** Conveyor: **4 m** Weight: **685 kg** Production year: **2024** CE 3 830014 118395 S.N.: LNCM10883O GOMARK trgovina in proizvodnja d.o.o. Gomark, trgovina in proizvodnja d.o.o. Čeplje 56, SI-3305 Vransko, Slovenija	**IDENTIFICATION DATA OF THE MACHINE – PRODUCERS PLATE**

LNCM601	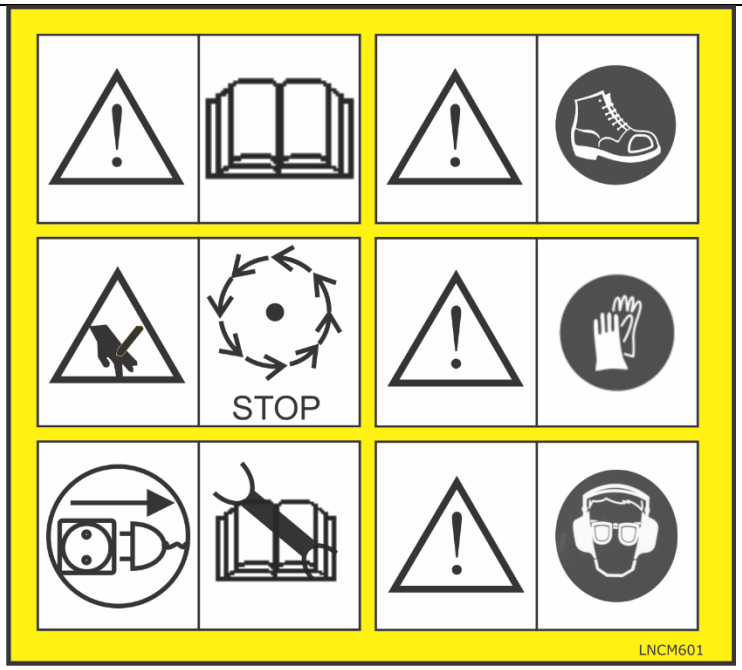	**PLEASE CAREFULLY READ THE USER'S MANUAL BEFORE USING THE MACHINE.** **RISK OF INJURY – CUTS DUE TO THE ROTATING CUTTING TOOLS.** **ATTENTION! BEFORE MAINTENANCE, SETTING AND CLEANING PULL OUT THE MAIN PLUG (700 EL) OR REMOVE THE PTO SHAFT (700 C)!** **OBLIGATORY USE OF SAFETY SHOES** **OBLIGATORY USE OF PROTECTIVE GLOVES AND PROTECTIVE CLOTHES.** **OBLIGATORY USE OF PROTECTIVE GLASSES AND HEARING PROTECTION**
LNCM632		**Mandatory rotation direction of the PTO axle.** **Max. 4000 rpm on the PTO axle.** **When connecting the PTO shaft, make sure that the protective PTO cap covers the PTO joints.** **DANGER OF CAPTURE!** *** PLACED ON THE MODELS WITH A PTO DRIVE.**
LNCM109		**RIGHT ROTATION DIRECTION OF THE SAW BLADE!**
LNCM631	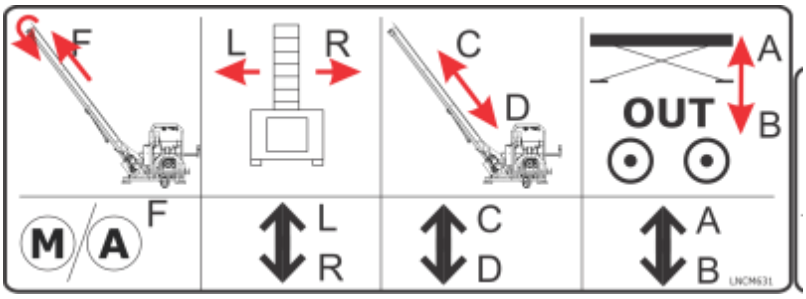	**FUNCTIONS FROM LEFT TO RIGHT** **TURN ON/OFF THE DRIVE OF THE CONVEYOR BELT** **HYDRAULIC POSITIONING OF CONVEYOR BELT LEFT/RIGHT (USE ONLY WHEN THE BELT IS STRETCHED)** **APART/TOGETHER INSTALLATION OF THE CONVEYOR BELT INTO WORKING POSITION/TRANSPORT POSITION.** *****OPTION-LIFTING TABLE TTH 2001 UP/DOWN***

LNCM631A	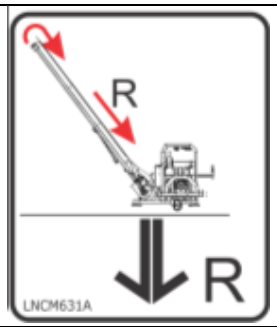	**CONVEYOR BELT RETURN BUTTON (MUST BE PRESSED ALL THE TIME)**
LNCM608	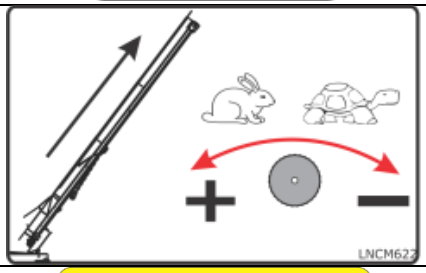	**REGULATION OF OIL FLOW/ REGULATING THE SPEED OF THE CONVEYOR BELT**
LNCM620	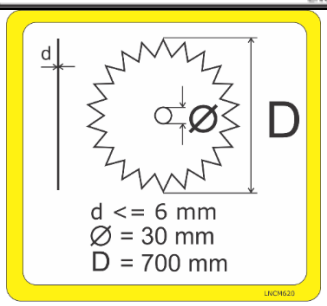	**SIZE OF THE SAW BLADE** **d – WIDTH OF THE SAW BLADE** **Ø – WIDTH OF THE AXLE/DIAMETER OF THE AXLE** **D – DIAMETER OF THE SAW BLADE**
LNCM106	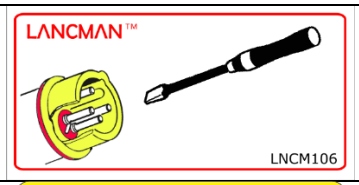	**SETTING THE DIRECTION OF THE MOTOR ON THE CIRCULAR SAW.** *** PLACED ON THE SAW WITH AN ELECTRO-ENGINE ONLY.**
LNCM603		**MINIMUM PAUSE AFTER THE ENGINE HAS STOPPED AND BEFORE YOU CAN TURN THE ENGINE ON AGAIN.** ***Only for electric saw (models EL and ELD)**
LNCM110	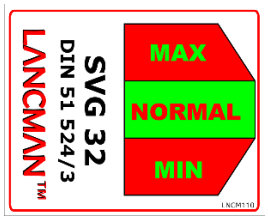	**OIL CONTENT IN THE TANK THE CONTENT SHOULD ALWAYS BE BETWEEN MIN AND MAX MARK!** *** PLACED ON THE MODELS STR, STEL AND STR+EL.**
LNCM237	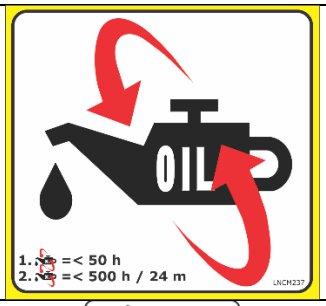	**OIL CHANGE.** **(MAKE 1ST CHANGE OF THE OIL AFTER 50 WORKING HOURS, AFTER CHANGE IT EVERY 500 HOURS OR 24 MONTHS!)**
LNCM606		**NOISE LEVEL**

LNCM604	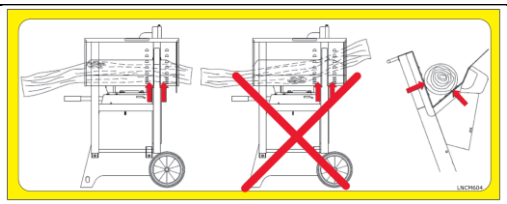	**CORRECT USE OF THE SAW OR HOW SHOULD THE FIREWOOD LIE ON THE TILTING TABLE!**
LNCM625	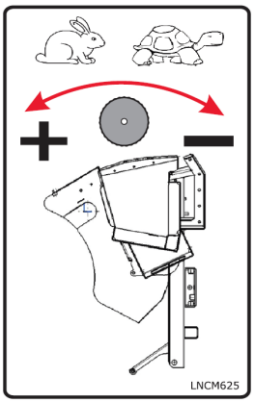	**SPEED REGULATION OF THE TILTING TABLE**
LNCM627	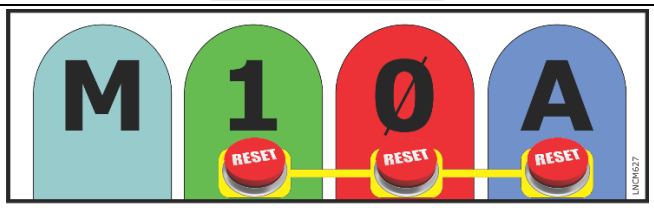	**CONTROL PANEL** **1-A** **0-OFF (SWITCH OFF THE TILTING TABLE AND CONVEYOR BELT)** **M-MECHANICAL MODE** **A-AUTOMATIC MODE**
LNCM612	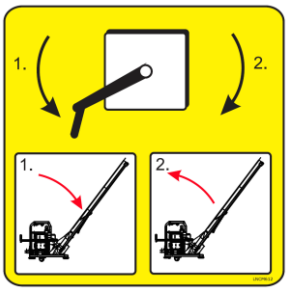	**HAND WINCH FOR ADJUSTING THE CONVEYOR BELT INCLINATION!**
LNCM163		**PLACE FOR FORKLIFT**
LNCM135 LNCM624	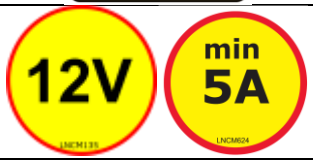	**POWER SUPPLY 12V / 5A (>=5A)**
LNCM628	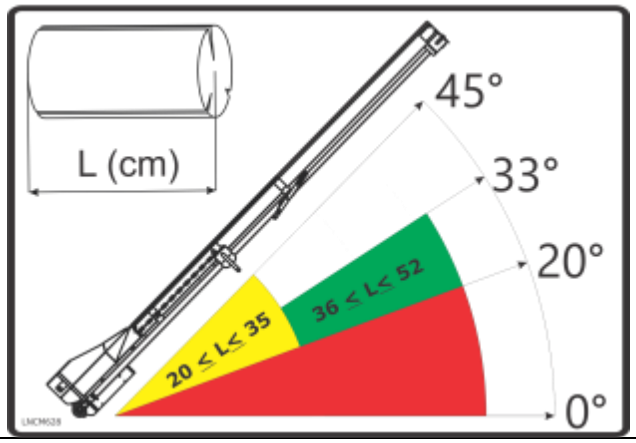	**CONVEYOR ANGLE WHEN SAWING DIFFERENT WOOD LENGTHS!** **Wood lengths of 20-35 cm can be transported between 20 ° and 45 ° degrees, wood lengths between 36 cm and 50 cm but only between 20 ° and 33 ° degrees. With longer wood, the wood can get stuck in front of the conveyor belt.**

LNCM167		**POSITIONS OF MACHINE PARTS FOR GREASE**
LNCMN633		**DANGER AREA NEAR THE MACHINE!**

** OPTION - only in use for LIFTING TABLE LANCMAN TTH 2001 – additional equipment.

6. START, STOP

6.1 Tractor drive, model STR and STR+EL

Plug in the saw to a three-point connection of the tractor. The connection of the saw meets the category stated under the technical data.

Firstly, plug in the saw to a three-point connection of the tractor.

When approaching the tractor to the saw, please make sure no one is between the saw and the tractor. Risk of capture! In the area of the lifting of the hydraulic system of the tractor there is a danger of injuries in form of crushing and pressing. All pins should be secured by spring pins (everything included!).

The arms of the tractor hydraulics must be firmly attached so that the machine is tightly attached and does not sway. To ensure a safe stability, there must be at least 20% of the tractor weight together with the machine on the front tractor axle.

Make sure that the carrying capacity of the rear wheels is appropriate (check the technical data in the user's manual for the tractor).

Before you connect the machine to the tractor, please read the user's manual for the tractor.

Plug in the PTO shaft and secure it with a safety chain.
PTO shaft on the pump of the log splitter meets standards of the PTO shaft with 6 cogwheels.

The PTO shaft must be CE-marked, properly protected and must have a chain to lock it. Carefully read the user manual for the PTO shaft and connect it as described by the manufacturer of the PTO shaft. Make sure that all protective equipment on the PTO shaft and a plastic cap (protection) on the splitter are covered at least 50 mm.

Make sure that the direction of rotation of the tractor PTO shaft is correct (picture)!

The PTO shaft shall not be too long! A too long PTO shaft may cause damage. A too long shaft may damage the angular transfer of the saw. In such case, the warranty is voided.



Connect the quick couplers.
Set the revolutions in the tractor to minimum.
Slowly turn on the tractor PTO shaft and the circulars
Set the desired rotational speed of the PTO shaft on the tractor.

The maximum rotation speed of the PTO shaft: 400 rpm

The maximum rotation speed of the PTO shaft is an important piece of information. The speed should not be exceeded under any circumstances, because it may result in damage to the saw blade.
Check the maximum number of revolutions on the saw blade. Never exceed the maximum number of revolutions!

Do not use a PTO shaft with clutch!
The drive of the saw with operates only via the PTO shaft of the tractor in both models.

The band saw drive only works via the PTO shaft of the two models.

Connect the electrical connection. The plug is three-pin. You must have a 12 V and at least 5 A electrical connection on the tractor.
Check if the power is connected. When button 1 is pressed, the button must be illuminated accordingly.

The manufacturer assumes no liability for any damage or malfunctions due to incorrect power supply.

Machine is used with EMERGENCY STOP SYSTEM - CLUTCH WITH BRAKE. To shut down the machine in an emergency, all you have to do is press the RED button and the machine will come to a standstill in max. 8 seconds!

To bring the machine back into use, you have to push the lever back until the lever is locked.
System with clutch and brake is only included in the basic equipment of the 707 STR, 707 STR + EL models.
Caution! After the emergency switch-off, the tractor drive must be switched off in 30 seconds. V-belts can burn when idling for a long time.





6.2 Electric drive - STEL

The machine uses a three-phase 400 V, that need three electrical phases and neutral.
Therefore, before any new connection or change of location it is necessary to check the direction of rotation; if necessary, polarity should be changed (switch the combination: switch - plug - phase transmission).

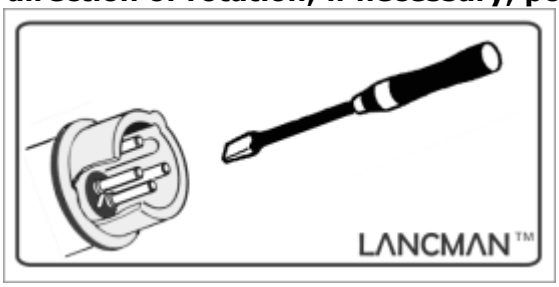

The direction of rotation is correct if the teeth on the saw blade rotate towards the working side (see pictogram on the protection of the saw blade). If the direction of rotation is incorrect, it is necessary to change the direction, so that the two poles of the phase transmission (black) in the plug change using a phase inverter – (a screw) by gently pushing it and turning it 180 °. Check the arrow - the direction of rotation.

Check the direction of rotation!!

When checking the direction of engine rotation, let the engine run for the shortest time possible!



Work on the electrical equipment must be carried out by trained personnel only!
Warning: This device may only be connected to the electricity supply network with an electrical impedance of less than or equal to Z_{Max} = 0.39 Ohm. In case you do not know the network impedance, please consult your supplier of electricity.

The machine may work only through a network protected by a protective switch of fault current <30mA.

Before you plug in the saw, please check if the power and voltage are proper. Carefully read the plate on the electromotor and on the circular saw. The line voltage must be at 400 V/50 Hz.

The circular saw is equipped with a heat relay which stops the engine if overheated.

Mains cables and extended electric conductors must contain 5 wires (3P+N+Z) or 3 wires (1P+N+Z), depending on the model and the power of the connection (see the table with the technical data). Connection to the mains - only via plug with a protective contact 5-pole 400V with a 16A fuse.

To prevent overheating of the cable and motor, use a right electric conductor (min. thickness 2.5 mm (0.098 inch)/max. length 15 m (49.2 feet). Do not use a rolled cable.



The saw is equipped with an electronic brake. If the green button (see picture) pops out as soon as the motor is turned on, it means it has not sufficiently cooled. **Never hold the power button!**
After switching off the engine, the saw blade stops after about 10 seconds. During braking and for a little time after it stops, the machine hums. In this phase, never turn the switch on or off. You may switch on the engine for 1 minute after the sound dies down.

START (1): press the green key
STOP (0): press the red button

⚠ **BEFORE CARRYING OUT MAINTENANCE AND INSPECTIONS PULL THE ELECTRIC PLUG OUT (DISCONNECT IT FROM THE POWER NETWORK)!**

Due to inflexible plug connections the CEE plug may get ripped from the chassis of the switches. Use a coating or sprays to protect the plastic.
For such damage the warranty is voided.

Caution: In the event of a machine brake failure the circular saw should not be used! In case of danger, for example entrapped piece of wood, immediately press the EMERGENCY STOP button! Otherwise, the motor will overload.

⚠ **Make sure that the power is grounded and that the saw is connected to a voltage with a differential switch**.

When using a circular saw, make sure that no additional electricity consumers are connected to the same circuit as this, in the given circumstances may initiate the fuse.
In case of overheating due to machine overload, it turns off automatically via the built-in overload switch. The engine may be switched on again only after it has cooled down to a surface temperature of about 30 ° C.

The engine and switch should not be cleaned with a jet of water, high-pressure cleaner or similar devices! There is a risk of electric shock and destruction.

In addition, it is prohibited to use the saw outdoors in wet weather! There is a danger of electric shock!

6.3 Combine drive STR+EL

By the combine drive, must be carried out, that only one drive can be operated at one time.
The machine SAF-X-CUT has this solution, that when the PTO is connected to the SAF-X-CUT, electric switch cannot start because, there is an interrupting switch covering machine PTO with small doors. When the doors are closed, interrupting switch is on, and the electric switch can start the electric motor.


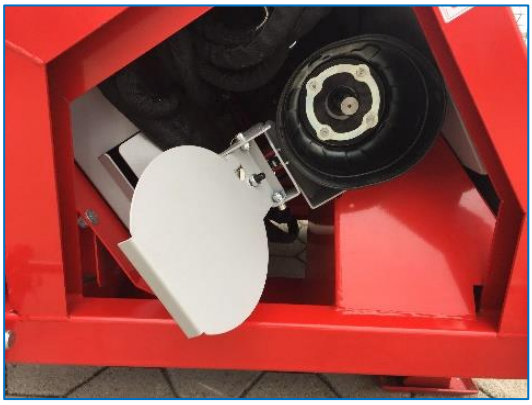

You can’t use both drives together at once.

6.4 Start



First it is necessary to set up the stabilizing feet, so that the belt is stable and there is no risk of tipping. Pull the telescopic legs out and place them at the far outer edges. This will stabilize the conveyor belt even when the entire belt is pulled out.
IMPORTANT: first loosen the chain. **Extend the conveyor belt hydraulically via the control unit!**

Then stretch the conveyor belt with the help of hydraulics, from transport to working position.
See the figure below, command lever on the right - the right pictogram.

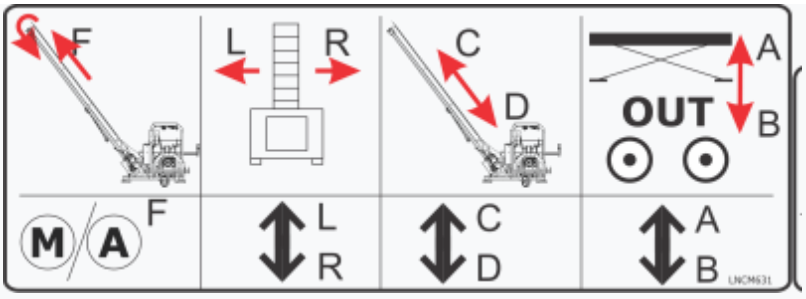

Functions work in sense, only one at a time. Function on the left side always has priority!

FUNCTIONS FROM LEFT TO RIGHT
M/A
M - MECHANICAL MODE – ONE CUT
A - AUTOMATICAL MODE – AUTO CUT
HYDRAULIC POSITIONING OF CONVEYOR BELT LEFT/RIGHT (USE ONLY WHEN THE BELT IS STRETCHED)
TELESCOPIC CONVEYER APART/TOGETHER
INSTALLATION OF THE CONVEYOR BELT INTO WORKING POSITION/TRANSPORT POSITION.
OPTION-LIFTING TABLE TTH 2001 UP/DOWN



At the same time, ensure that the belt leans properly, so that when stretching, the conveyor belt cannot get stuck! The belt can be damaged and tear down! Prescribed angle for the operation of the conveyor belt 30 ° <α <45 °.

The inclination of the belt is regulated by an interim handle - see image above, pictogram in the middle.
When the belt is tightened, visually check if everything is safe to continue working.
Also do a test run of the conveyor belt. If problems occur, immediately stop the operation and check where the problem has occurred (capture of a belt, plate) and solve the problem.

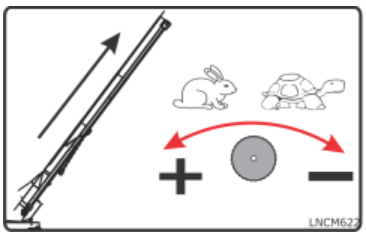

The machine also has the possibility for regulating the speed of the conveyor belt.
Next to the pictogram (figure on the right), there is an oil flow regulator for speed regulation.

Before starting, you must also observe the correct direction of rotation of the saw blade. See the pictogram on the saw protection - the direction of rotation!

The operation of the saw blade on the STR and STR + EL models is started by turning the tractor through the PTO drive.

⚠ **The machine should never run or move when the conveyor belt is extended. Movement when the conveyor belt is extended can cause damage to the conveyor belt, which is not a warranty case.**

The tilting table for wood cutting works with the help of a hydraulic cylinder. All the logic of the mechanism is controlled by the saw's main computer. To activate the mechanism for moving the tilting table, button 1 must first be pressed (the entire control panel is designed so that the button illuminates when active).

Before starting work, check that the channel in the seesaw is empty and that there is no wood, wood residues or other foreign matter. To control the process, make a cut by pressing the M button. At the same time, the conveyor switches on and continues to work for 15 seconds after the last press.

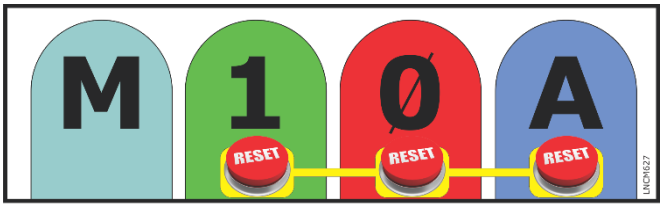

Hold the button (M) down until a cut is made. When the tilting table reaches the inner position, it touches the limit switch the tilting table inner position. Release the button. In the meantime, the table automatically returns into starting position by means of a spring. If the movement was too fast or too slow, set the desired speed using the rocker switch with the adjustment knob. Note, however, that the shift is not too fast in terms of cutting speed. If you move them too fast, the machine or parts of the machine may be damaged, which is in no way covered by the guarantee.
For the automatic mode, press the (A) button (you cannot check the automatic operating mode if you do not insert a log of wood into the channel of the tilting table). Press the (0) key to exit the operation of the control panel.



If you have to stop in an emergency, press the red sponge (picture on the left for the STEL, and picture on the right for the STR + EL and STR models)!



When you've finished assembling the belt, check the operation of the belt, tilting table and the saw blade. Then you can start working.

6.5 Electronics in the SAF-X-CUT AUTOMATIC



GREEN BUTTON - Start button, turns the controller on.
RED BUTTON - electronic switch-off. Switches off the controller and thus switches off, the tilting table function and the conveyor belt movement.
BLUE BUTTON - Switch on automatic mode. The pressure system on the length stops notices when the wood actuates the switch with its own weight. The seesaw then runs in the cutting direction. At the same time start moving conveyor belt.
BLACK BUTTON - Mechanical mode - a single cut can be triggered by pressing a button. To move, you have to hold the button down until the tilting tables reaches inner position. At the same time the conveyor belt starts moving and continues to run for 15 seconds after the last pressure.
GREEN LIGHT - Electronics are switched on. The controller is active, you can work in mechanical mode.
BLUE LIGHT - Automatic mode is switched on. If you press the black button, automatic mode is switched off.
We have made various alarm signals to the SAF-X-CUT AUTOMATIC saw to prevent incorrect operation.
Important! Each alarm switches off after 1 minute.
But you can switch off the alarm yourself beforehand - by simultaneously pressing 3 buttons - GREEN-RED-BLUE, press for 1 second.
After that, you must press the green button to switch on and the blue button if you want automatic operation. Alarm only runs in AUTOMATIC mode.
Black button mechanical mode - first green must be switched on. Then hold down the BLACK BUTTON until the cut is finished (at the same time the conveyor belt starts moving and continues to run for 15 seconds after the last press).
If you work in automatic mode and press the black button, automatic mode switches itself off.

Possible errors are described individually in the title Help with the difficulties.

7. PREPARATION AND WORKING WITH SAF-X-CUT

7.1 Preparation

The saw with a conveyor belt is intended for use by one person at a time. The machine should never be used by two people at the same time! Failure to comply with the instructions for use or directions can lead to injuries and may even be fatal to the operator.

Provide safety instructions to all persons working on the machine!!

It is important that all users are properly trained on the use, configuration, and operation of the cantilever circular saw. The user must be aware of the factors that influence noise exposure (such as saw blades that are designed specifically to reduce emitted noise, as well as the maintenance of the saw blade and cantilever circular saws).

In addition, the user must be informed about the factors that affect dust explosion. The user must be familiar with the type of material that can be sawed. It is also important that the user knows where dust is ejected and where other waste is located, so that they can take the necessary action (vacuum cleaner placed at the site of ejection) and a dedicated setting of the suction covers, deflectors and catcher for chips.

When working wear safety goggles, respiratory protection, safety shoes, hearing protection and close-fitting clothes! Also remove jewelry, rings and watches.

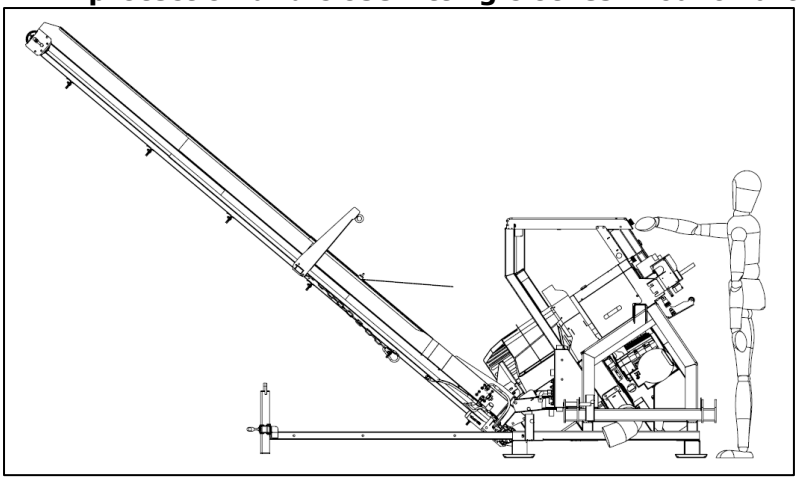

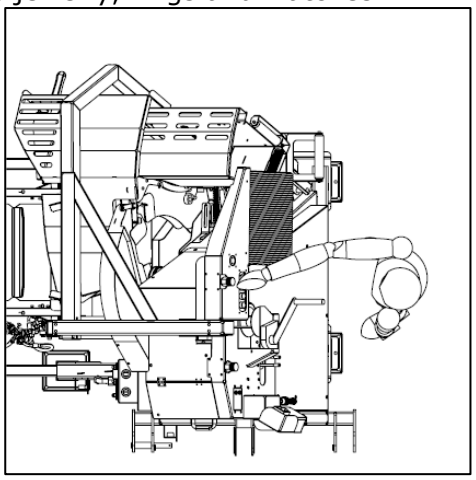

Pictures above show where the operator must stand when working with the machine (working position)!

Make sure that the floor around the machine is free of debris such as chips and pieces of wood. All protection and safety devices must be installed on the saw.

Sufficient lighting is also essential

Make sure that the machine is placed on a flat surface with a solid base and is stable. This means that the surface is non-skid, vibration-free, and stable. Make sure that the floor around the machine is free of waste, such as wood chips and cut pieces. All protective and safety devices must be mounted on the saw.

It is also necessary to provide adequate lighting.

Before starting the machine, perform verification functions.

After the first 3 hours of operation tighten all the nuts and bolts, and then after every 25 hours of operation.

Check the electrical connection cables and do not use damaged extension cords. Make sure that children do not approach the device that is connected to the network. The person who operates the machine must be at least 18 years old. Apprentices must be at least 16 years old and can only work under supervision (Attention! Comply with your national regulations.). The operator should be focused when using the machine and shall not let anyone disturb him/her.

Since the saw is not equipped with a device for the extraction of dust, it may be used only outdoors and not in enclosed spaces. Otherwise, it is necessary to install a suction device, which conforms to EN 12779:2004 standards, to the circular saw. Pay attention to the life span of the sawblade.

Always maintain a clean working environment. In the working place, there should be no wood waste and other parts lying around.
Use only sharpened saw blades with no cracks and other deformities (bent saw blade is not suitable) should be installed.

⚠ **Do not remove or change in any way the safety parts of the machine (switch with an electric brake, protective cover of the saw blade)!**



⚠ **Never leave the machine unattended during operation!**

⚠ **Before each use, check the condition of the circular saw and particularly the condition of the protective cover and the condition of the saw blade! In case of damage, call customer service or replace the saw blade with a new one! Do not operate the saw blade until the defects are corrected.**

In case of troubleshooting or removing trapped wooden pieces, shut down the machine. To do this, press the 0 key and pull out the plug (in case of an electric saw) or stop the tractor and disconnect the PTO shaft (PTO-driven saw)!

⚠ **Be careful at work: there is a risk of injury to fingers and hands from the rotating cutting tool.**

Wooden splits and sawdust should be promptly removed from the machine in accordance with the requirements, so that they do not impede safety in the workplace. There should be open space for the discharge of sawdust. When there is a large pile of sawdust under the blade, remove it, as otherwise the teeth of the saw blade will throw back the sawdust. The sawdust in the vicinity of the saw blade should not be removed by hand.

⚠ **During operation, never reach into the vicinity of the saw blade. In case there is a need to remove any part of the cut wood or wooden splits, make sure that the machine is at a standstill.**

When sawing curved wood, the curved side must be directed towards the slot in the saw blade to prevent tipping over and jamming the wood during sawing. When pressing the cantilever table hard towards the saw blade, the motor is also heavily loaded. Therefore, the wood may jam in the saw blade (risk of motor overload!).
Only experts may perform installations, repairs, and maintenance of electrical installations.
When leaving the workplace switch off the engine - **pull out the plug!**
Only saw blades that are made in accordance with the standard EN 847-1:2005+A1:2007 may be used.



⚠ **In order to prevent fire, it is necessary to clean and maintain the machine and regularly remove wood chips and dust.**

⚠ **Be careful when working with a conveyor belt!**
During operation you should bear in mind that parts of wood may freely fall from the belt. It is dangerous and should not be allowed to stay in the vicinity of the belt.

⚠ **During operation, never reach into the funnel area of the conveyor belt!**
In case it is necessary to clean the wooden splits and other wooden parts, you should first stop the drive of the saw blade and stop the belt. Then you may clean the belt and remove any foreign objects!

⚠ **The saw with a conveyor belt can only be used outdoors!**

7.3 Working with circular saw SAF-X-CUT AUTOMATIC

It is easy to work with circular saw SAF-X-CUT. Split or round wood, as shown on the picture left, put it into the opening of the pivoting table, that 34°angled is.

AUTOMATIC MODE

Before starting work, the saw must be switched ON on the Control Panel with the electronics button in order to control the function of the hydraulic tilting table (button 1). The buttons will illuminate to indicate that they are on (the light is on). Then press the A button for the automatic operation of the saw (light).

Then you can start working. Also check that the conveyor belt is working in the right direction - ejection! Place the wood in the seesaw channel so that it slides up to the length of the stop. Under the weight of the wood, the contact sends the signal for movement. The saw now cuts wood with the help of a hydraulic cylinder. The tilting table then automatically returns to the starting position. Then wood continues to slide until it reaches the length and when contact is made the cut is repeated. The tilting table repeats its movements as long as there is still material in the trough that triggers the drive switch. The last movement of the remaining wood that can no longer be cut is made by the saw itself.



If any of the movements did not occur automatically, you can activate them by pressing the M button manually.
The rocker follows as long as you hold down the compressed button for a long time.
When the overhang table is empty, use a new split wood. Then keep working like this. Here is a warning that during the long work, the rest needs the body.

MANUAL MODE

In manual mode, button 1 must be switched on to operate the tilting table. The split wood is fed into the shaft of the seesaw from above, as shown in the picture. The wood is fed into the shaft so that it slides down to the limiter. Then the cut is made with the hydraulically operated rocker. The rocker is pressed to the saw blade with the help of a hydraulic cylinder, which is operated by the operator with a button. You have to press the button until the rocker is at the stop; then let go immediately. The rocker is pulled back by a spring. After sawing, the rocker is returned to its starting position. The wood in the shaft slides through the mass back to the limiter. The cycle has to be repeated until the shaft is empty. Then new wood can be introduced.

As soon as you leave the button, the rocker runs back automatically.
The system also has a built-in limit switch for safety. When the tilting table comes to the end position, this limit switch switches off the hydraulics for 2 seconds. This prevents you from wobbling back and forth with the uninterrupted pressure on the in the end position.
The system has a built-in emergency stop switch that is only to be stopped in case of danger. With an electric drive, the switch switches off the entire sawing operation and switches off the hydraulic system of the slab table on the PTO drive.

⚠ Top on the pivoting table is for safety closed.

⚠ Nevertheless, the man who is working with the machine must carry protective gloves, protective cloths, eye and face protection and noise protection.

⚠ **Danger of small-ejected parts.**

7.3 Length adjusting



Circular saw has a serial length limitation, with already prepared positions for length cut - 15cm, 20cm, 25cm, 30cm, 33cm und 50cm. Another length can be adjusted between 15 and 50 cm with screws tightening.

⚠ Given length on the circular saw is not certified – it is only for better orientation when working.

⚠ Length adjusting can be done only when machine is in off position.



You have to leave about 1cm of space between the flap and the length of the stop.

A contact switch is installed along the length of the stop, which acts on the metal hinge at the bottom. This switch is built for automatic mode. With every contact, the switch gives a signal to the saw computer to make a cut.

7.4 Ejection protection - contactor brushes

The SAF-X-CUT AUTOMATIC saw has a brush protector built into it above the tilting table, which protects the chipped and small pieces of wood from being ejected to the operator. If protection brushes are damaged, used ones must be replaced with new ones.

⚠ **NEVER WORK WITHOUT THE PROTECTIVE BRUSHES.**

7.5 Suction connection for saw dust

Circular saw with conveyor SAF-X-CUT has a special closing for dust and small-ejected parts on the bottom part of the blade protection. The protection has a round tab connection of diameter 140 mm.

The extractor can be connected to the sawdust ejection with a flexible pipe. The dredged pipe and the flexible pipe are not included in the scope of delivery of the saw.

WARNING: When cutting the saws, larger pieces may be present, such as B. a crack axis or partially sawed wood. These parts can damage the extractor!

8. MAINTENANCE

8.1 Break with clutch

You must try the brakes periodically (every 2 months or every 100 hours - whichever comes earlier). First you must let the saw run and press the red EMERGENCY STOP button. Machine must be silent for a maximum of 10 seconds. If so, you can continue to use the machine. Otherwise, you have to repair the clutch by Servis - replace it!

8.2 Strap transmission

Every 100 hours, lubricate the bearings of the main axis of the saw with grease.

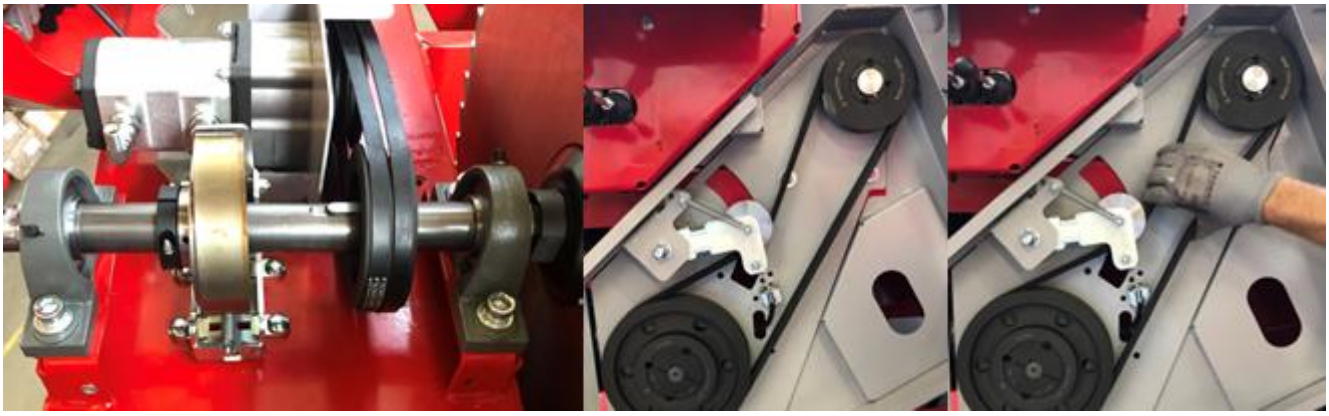

Every 100 hours, check the tension of the strap. Hold the strap with your hand. It should have less than 30 mm of play (+/- 15 mm from the primary axis). See image on the left.

8.3 Angle transmission of the PTO drive

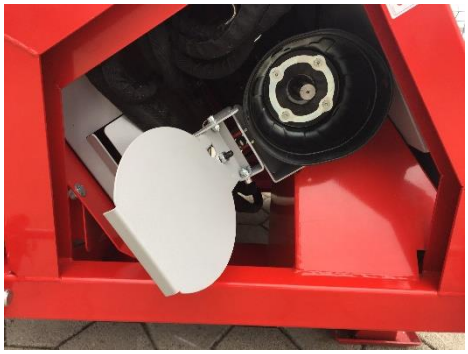

Change oil after the first 250 working hours in the drive / angle transmission of the saw. Use oil SAE 90. Further oil changes should follow after 1.000 working hours or once every five years.
With time the oil loses its viscosity and lubrication is worse.
Used oil should be disposed of in the appropriate waste in a special landfill. Oil waste does not belong in municipal waste.

Model STR+EL has a protective for PTO, when working with electric motor. There is an interrupting switch on the PTO door.

8.4 Hydraulic system

- Before every use, check the condition of the hydraulic installation (hose). Pay special attention to possible mechanical damage. A damaged hydraulic hose can burst under high pressure and oil can squirt out. This is very dangerous!
- Maximum oil level is reached when the lens for the oil level is full.
- When the oil level reaches 60 % on the scale, the minimum oil level is reached.
- If this is the case, add enough oil immediately.
- To add oil, unwind the lid of the filling part und use a suitable funnel.

8.5 Change of oil in the hydraulic system

Warning! Used oil must be removed in accordance with environmental regulations. Read and consider valid environmental regulations. *Note*: Before the change, the conveyor belt must be in the transport position (folded up).



First change of oil must be done after 250 hours of work on the conveyor belt. The next change must follow every 1.000 hours of work on the or at least once in 24 months.

1. Unwind the lid on the tank.
2. Prepare a container for approx. 30 l of waste oil and place it under the tap on the bottom of the tank. Unwind the magnet tap on the bottom of the tank and clean it before adding new oil.
3. Remove the used oil. Insert the tap on the bottom of the tank and seal it with a sealing compound. Add new oil to the tank. The oil must be of suitable quality described under item 4. **For the amount see the technical data on the saw**. You should reach the maximum point on the oil scale.

8.6 Maintenance of the oil filter

Check the oil filter and change it when you change oil. You may find aluminum scrapings that originate from the pump operation.
Change the oil filter after first oil change, later every 1000 working hours or sooner if you find a mechanical damage or holes.

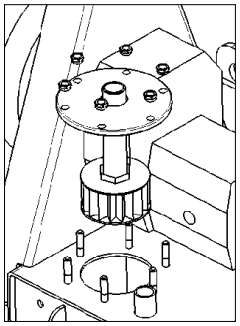

8.7 Other parts

Lightly lubricate the joint parts of the circular saw, if necessary.

8.8 Saw blade

The operator has to select only the saw blades, with a suitable diameter and thickness for the machine according to the model type. It's described in the technical data of the machine.
Only saw blades that are made in accordance with the standard EN 847-1:2005+A1:2007 may be used.
Check that the saw blade can operate at a max 2000 revolutions/minute! *Consider the maximum speed of the saw blade!*

CAUTION:
The diameter of the saw blade may decrease due to grinding by 5% at the most!
Before each use, check the saw blade. Use only well sharpened saw blades and saw blades with teeth spread out evenly.
A well-sharpened blade increases the working capacity and reduces the risk of kickback. Bad or blunt saw blades mean a lot of power consumption and may lead to motor overload.

If the blade is not sharp enough, it can quickly overheat. Timely replacement with a sharpened saw blade is recommended. Due to overheating, cracks can occur in the saw blade. Cracked saw blades must be replaced.

Protect the saw blade against rust with a little grease or oil.

⚠ **Saw blades on the machine are made of hard metal with 42 teeth. The wood must have NO nails or other hard objects. When sawing parts of the veneer the saw blade can break off or the teeth of the saw may be damaged in some other way.**

⚠ **The saw blade is not designed for such use. Failure to observe this instruction, will nullify the warranty claims!**

8.9 Attaching the saw blade onto the spindle



To attach the saw blade always use the original flange of the saw (as required by the manufacturer)!
If the diameter of the spindle is smaller than the diameter of the bore of the saw blade, it is necessary to compensate for the difference using flanged sleeves, as required by the manufacturer. Loose interim rings or sleeves are not suitable.

8.10 Changing the saw blade.

Disconnect the circular saw from the drive (pull the plug out or switch off the PTO shaft).
Unscrew it and remove the screws of the protective cover (4 screws).



Remove the protective cover of the saw blade.

Wrenches no. 48 and 30 are enclosed. Take wrench no. 48 and fix the nut on the flange (thereby fixing the saw blade), then take key no. 30 to unscrew the nut, which is embedded in the axle of the drive of the saw blade. Unscrew the nut completely to remove the flange of the saw blade. Then remove the saw blade. Always hold the saw blade with both hands. ***When removing and installing the saw blade always use appropriate protective gloves to prevent cuts!*** **Before inserting the sharpened blade, check it for possible cracks or other damage (test the sound of it)!** Always insert the new blade in reverse order. Firmly tighten the nut on the axis of the saw blade by holding the flange with wrench no. 48. Make sure that the protective cover of the saw blade is positioned so that the cantilever table and the various parts move smoothly and do not come in contact (collision)!



9. TRANSPORT AND STORAGE



When transporting saw, close the cantilever part of the saw with detent mechanism (see picture right).

Put the conveyor belt in transport position, as shown below.

Before the conveyor belt can be brought into the transport position, the belt must be positioned in the middle position and the length stop set to 25 cm. Otherwise the machine and the belt can be damaged. It must also be ensured that there is no longer any wood or other material on the conveyor belt.

Saw with a belt can be transported only when connected to the tractor.

When transporting on the road, follow traffic regulations. The maximum speed is 25 km/h.

In the event that the connector covered the lights on the tractor (towing wagons), at the far rear of the machine you must install a prefabricated light (e.g. magnetic light, lights on the aluminium pole)!

10. TROUBLESHOOTING

10.1. Help by electronics guides - alrets

GREEN LIGHT - Electronics are switched on. The controller is active, you can work in mechanical mode.
BLUE LIGHT - Automatic mode is switched on. If you press the black button, automatic mode is switched off.

We have attached various alarm signals to the SAF-X-CUT AUTOMATIC saw to prevent incorrect work.
Important! Each alarm switches itself off after 1 minute.
But you can switch off the alarm yourself beforehand - by simultaneously pressing 3 buttons - **GREEN-RED-BLUE**, briefly, groping for 1 second.
After switching off, you have to press the **GREEN BUTTON** to switch on and the **BLUE BUTTON** to switch on the automatic mode.
Alarm only runs in AUTOMATIC mode.
TALL GREEN button mechanical mode - first green must be switched on. Then hold down the **TALL GREEN BUTTON** until the cut is finished. If you work in automatic mode and press the black button, automatic mode switches itself off.



INDIKATION	ERROR	CAUSED	SOLUTION
ALERT 1 (green light flashes)	Alert 1 runs in the event that the circular saw rocker does not come to the final cut position within 5 seconds during work. That happens if something disturbs the seesaw on the path or if the cut is made too slowly.	Mechanical fault by moving the tilting table.	Check the tilting table mechanism and check whether wooden parts block tilting table on the way.
		The tilting table does not move or is too slow.	Speed controller for tilting table – readjust speed for fester moment.
		Check limit switch S3 if it is actuated at the inside position of the tilting table.	If the switch is not damaged, then readjust the switch position so that when the tilting table comes to an end position, the switch is operated.
		Other	Contact Service!
ALERT 2 (Blue light flashes)	Alert 2 runs in the case that the mechanism for wood at length stop does not work properly. The controller reports the error if switch S1 is pressed together for more than 5 seconds while sawing.	Sheet metal plate - flap at length stop is damaged.	Check the flap and in case of mechanical damage, the valve must be replaced with a new one.
		The flap on the length stop keeps the switch S1 pressed all the time.	Check whether small pieces of wood interfere with the flap and clean up.
			Check the hardness of the spring holding the flap. Adjust the spring correctly - harder or softer.
		Switch S1 at the length stop has unscrewed or moved.	Check whether the switch is still mechanically in order and if so, then reposition the switch so that the flap actuates the switch correctly.
ALERT 3 (blue and green lights flash together)	Alert 3 runs in the event that the circular saw tilting table does not come in time (within 5 seconds) in the start position - S2.	Disturbance on the way from tilting table.	Check the tilting table mechanism and check whether wooden parts block tilting table on the way.
		The tilting table does not move or is too slow.	Tilting table retraction springs are not set correctly and they have to be fine-tuned, tightened and fastened again.
		Check limit switch S2 if it is actuated at the inside position of the tilting table.	If the switch is not damaged, then readjust the switch position so that when the rocker comes to the end position, the switch is operated.
Other			Contact Service!

10.2 Instructions for other problems

What could be the reason, if

... the material for sawing gives off smoke?	The saw blade is improperly mounted. The saw blade is blunt - not sharpened. The direction of rotation is incorrect (change the phase).
... the capacity of sawing is bad?	The saw blade is blunt - not sharpened. The teeth of the saw blade are not spread out evenly. The saw blade is coated with resin!
...the blade does not run straight?	Axle of the saw blade is uneven. Change the axle of the saw blade.
... conveyor belt does not move!	Closed speed regulator. Open the speed regulator.
. the conveyor belt does not come to the highest position.	Check the oil level and refill up if necessary.
... The lighting on the control panel does not light up when you press button 1.	Check whether the current is switched on correctly and has 12 V and at least 5 A.
... tilting table runs all the time without stopping!	Contact switch jammed. Press the emergency stop button and switch off the machine. If the saw blade is still, then clean the throw-in channel in the tilting table and clean the wood below the sheet metal at the contact switch.

11. WEARABLES PARTS OF THE SAF-X-CUT AUTOMATIC CIRCULAR SAW

The consumables and wear parts of the SAF-X-CUT AUTOMATIC circular saw include:

- pressure switch,
- oil, oil filter,
- aluminum blocks in the saw's rocker,
- V-belt,
- Wear and damage of circular saw blade.

Consumable and wearing parts cannot be a case of claim.

12. HYDRAULIC AND ELECTRIC SCHEME

12.1 Hydraulic scheme for LANCMAN SAF-X-CUT AUTOMATIC

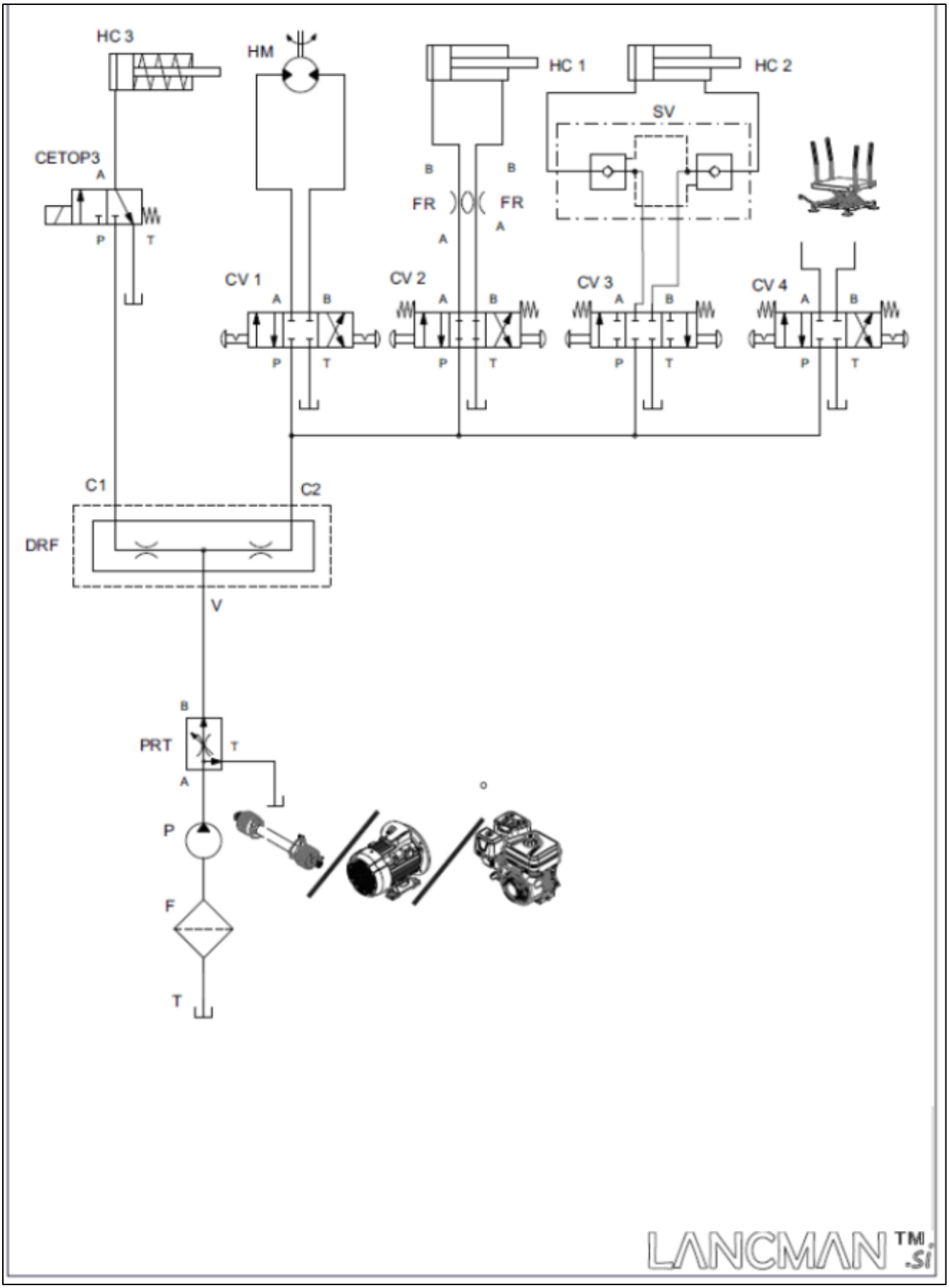

12.2 Electric scheme for LANCMAN SAF-X-CUT AUTOMATIC

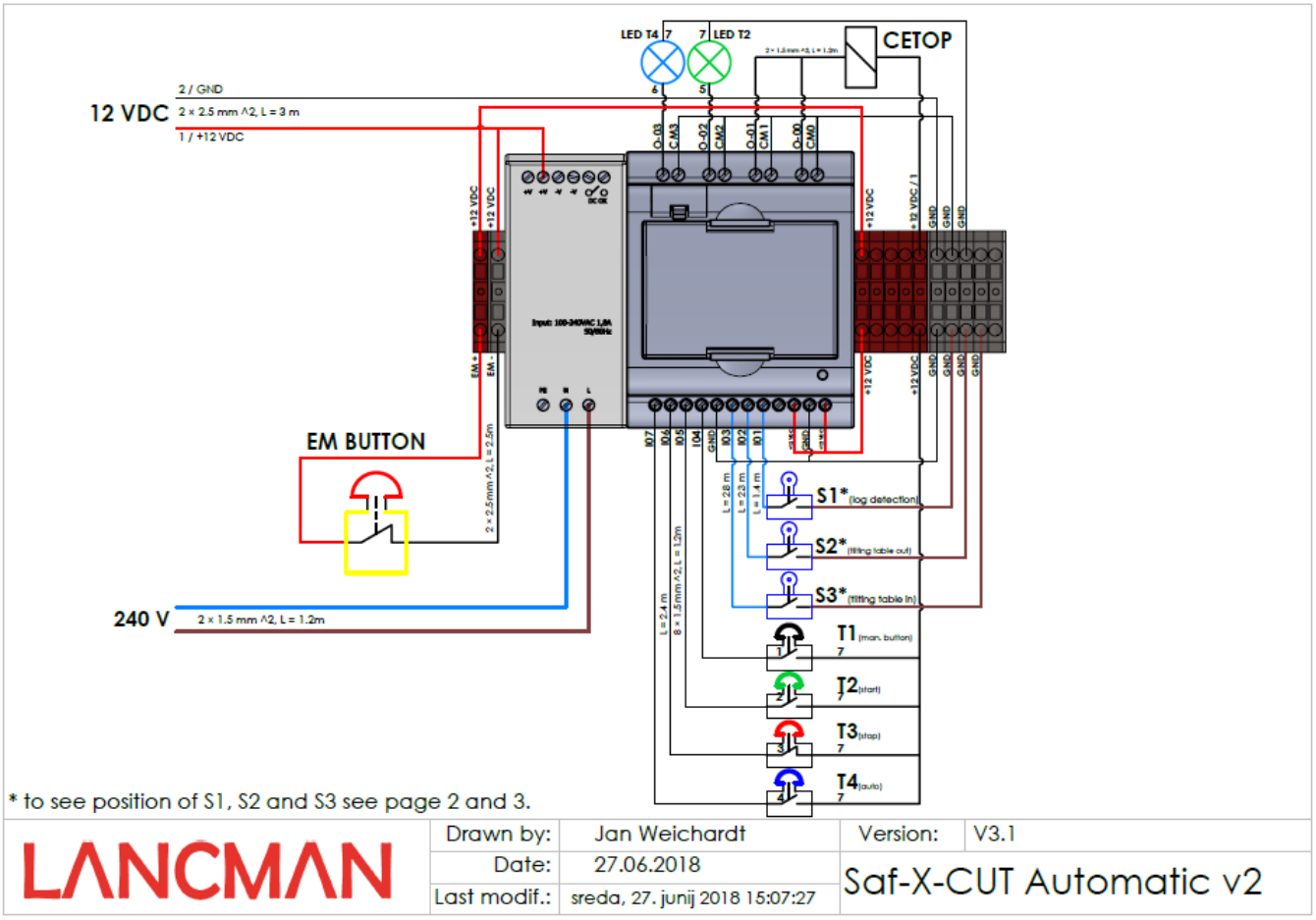

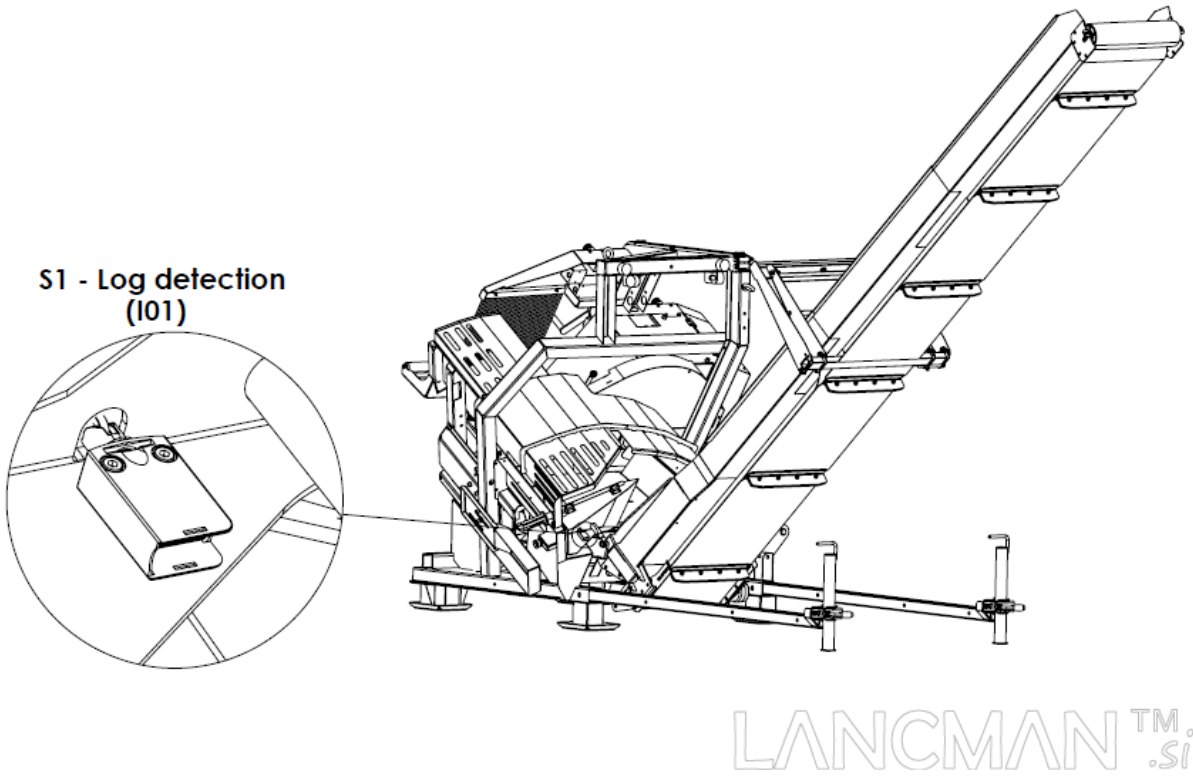

LANCMAN™.si

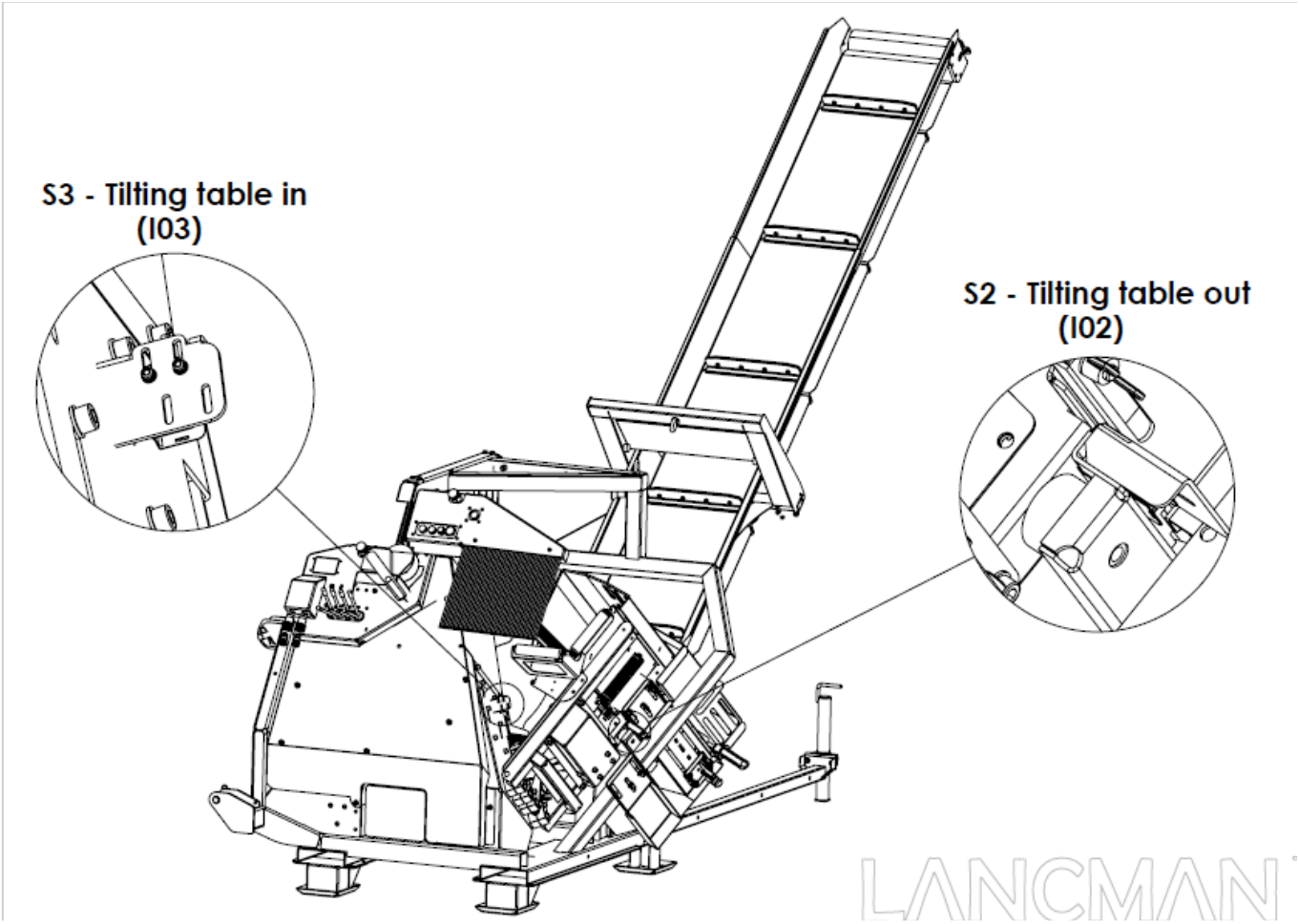
S3 - Tilting table in
(I03)
S2 - Tilting table out
(I02)

12.3 Electric scheme for LANCMAN SAF-X-CUT AUTOMATIC 707 STEL/ STR + EL

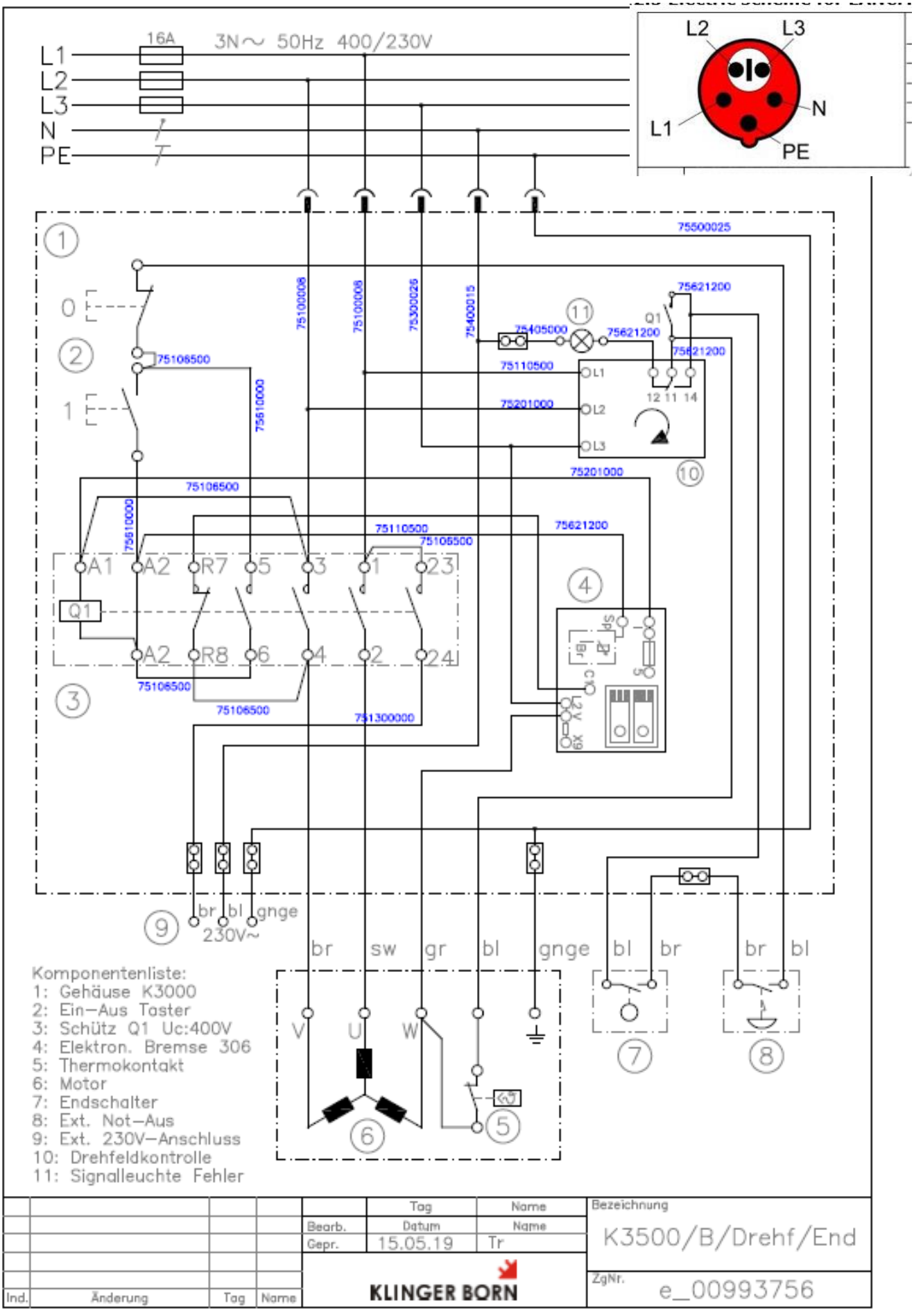

GARANCIJSKI LIST • JAMSTVENI LIST • GARANTNI LIST CERTIFICATE OF GUARANTEE • GARANTIESCHEIN • CERTIFICATO DI GARANZIA • ZÁRUČNÝ LIST • ZÁRUČNÍ LIST • JÓTÁLLÁSI JEGY • GARANTIE • CERTIFICADO DE GARANTÍA • CERTIFICATE OF WARRANTY • CERTIFICAT DE GARANTIE

NAZIV IZDELKA•PROIZVOD•PRODUCT•PRODUKT•PRODUIT• PRODUCTO • PRODUS

TIP/TYPE/TYP/TIPO/TIP:

SER.ŠT. • SER.NR. • SER.NO. • NÚMERO SERIAL • SERIA DE FABRICATIE:

- Ime, sedež in žig prodajalca:
- Naziv, sedište i pečat poduzeća:
- Reseller full name and address:
- Name, Sitz und Stempel des Unternehmens:
- Jméno, adresa razitko prodávajiciho:
- Meno, adresa a pečiatka predajcu:
- A terméket forgalmazó cég neve, székhelye és bélyégzoje:
- Concessionnaire nom, lieu et cachet:
- Nobre, dirección y sello de vendedor:
- Numele, adresa si stampila vanzatorului:

Datum izročitve blaga • Datum prodaje • Date of purchase • Verkaufsdatum • Data sprzedazy • Date predaja • Az eladás dátuma • Date de la vente • Fecha de la entrega • Data vanzarii

Podpis prodajalca • Potpis • Signature • Unterschrift • Potpis • Aterförsäljares namnteckning • Podpis prodejce • Aterförsäljares namnteckning • Signature du vendeur • Firma de vendedor • Semnatura vanzatorului

LANCNI

GOMARK
trgovina in proizvodnja d.o.o.

Čeplje 56, SI-3305 Vransko, Slovenija
Tel.: +386 (0) 3 700 15 03, info@gomark.si