LANCMAN 3003 STH
LANCMAN 3003 H STH
LANCMAN 3003 VF STH
LANCMAN 3003 HVF STH

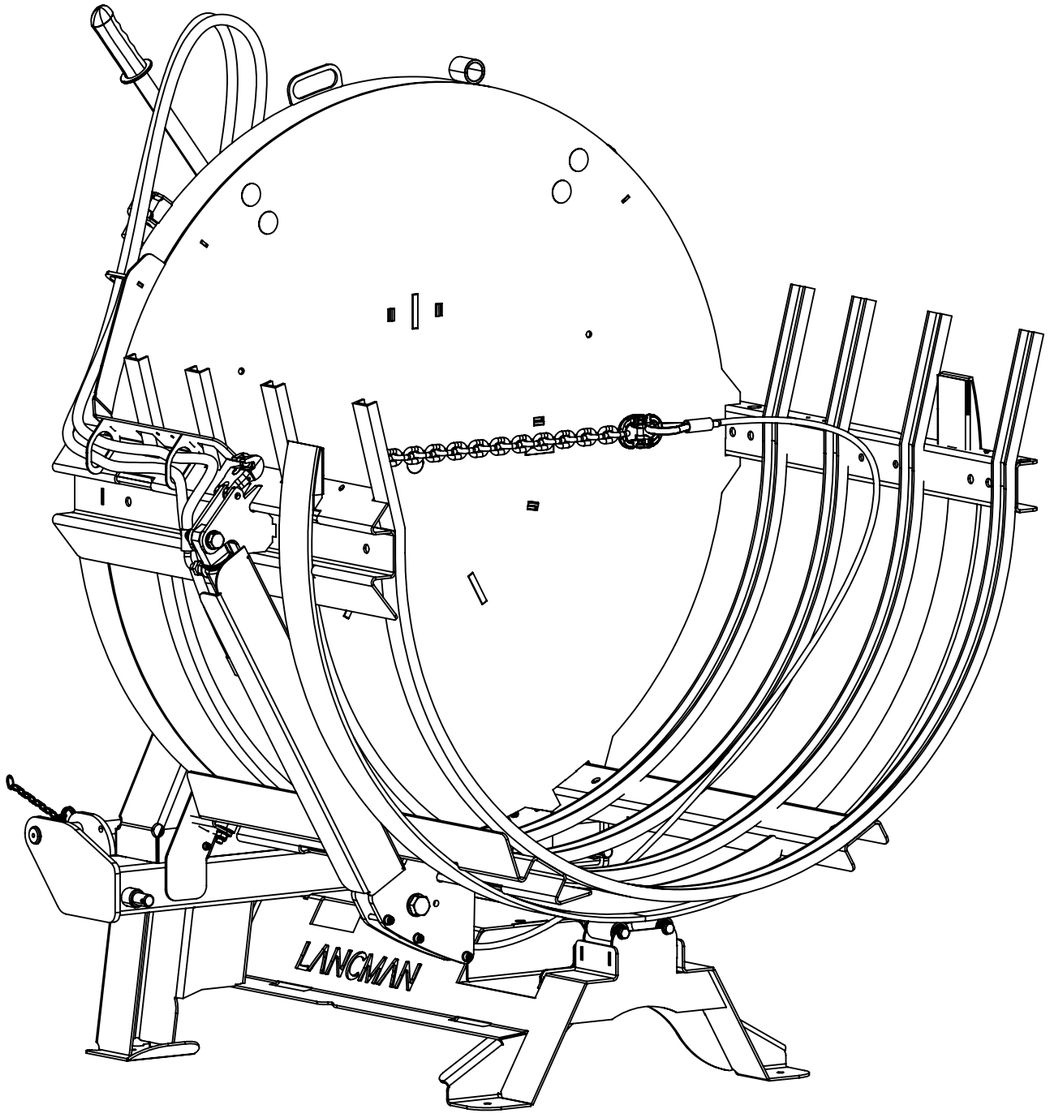

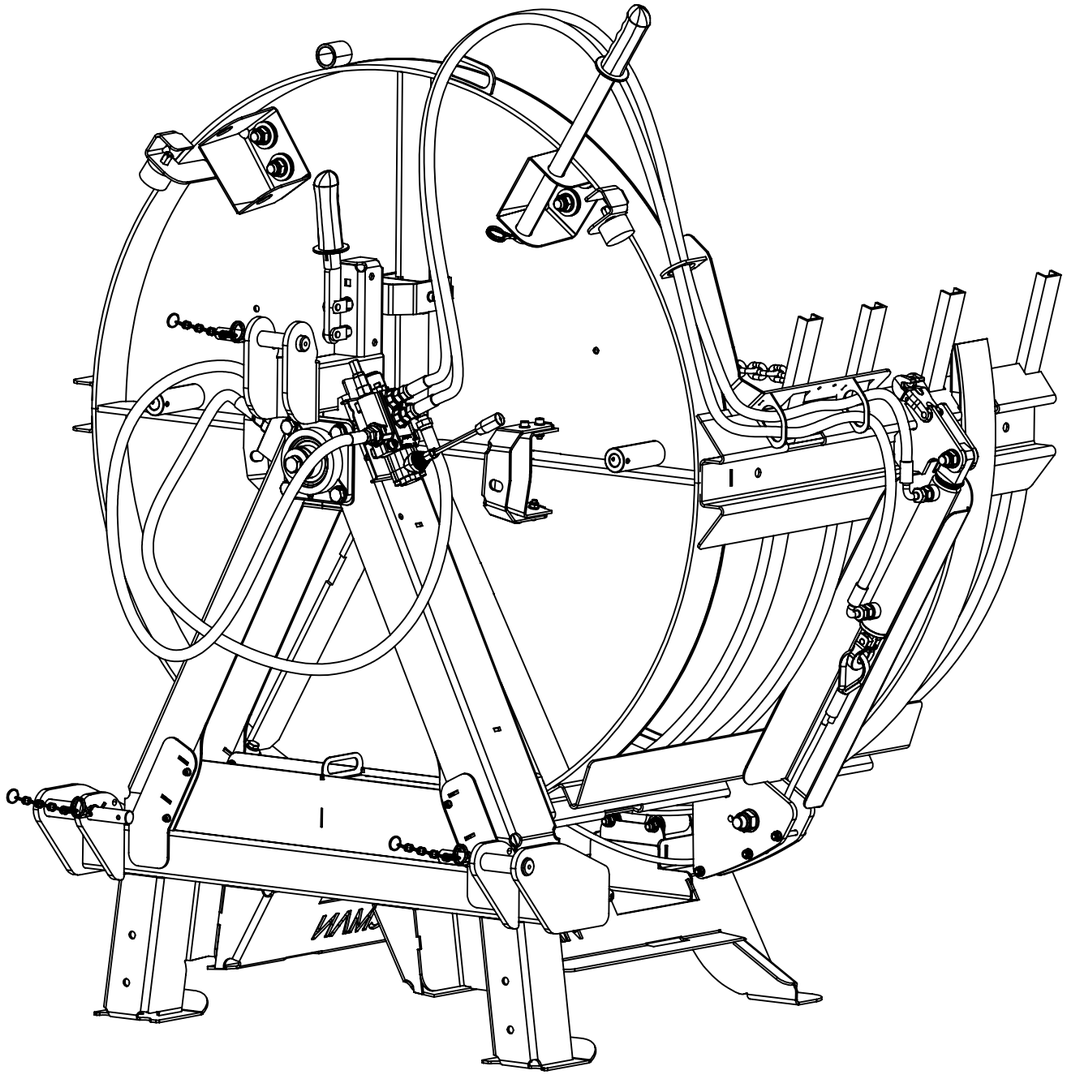

LANCMAN® by GOMARK

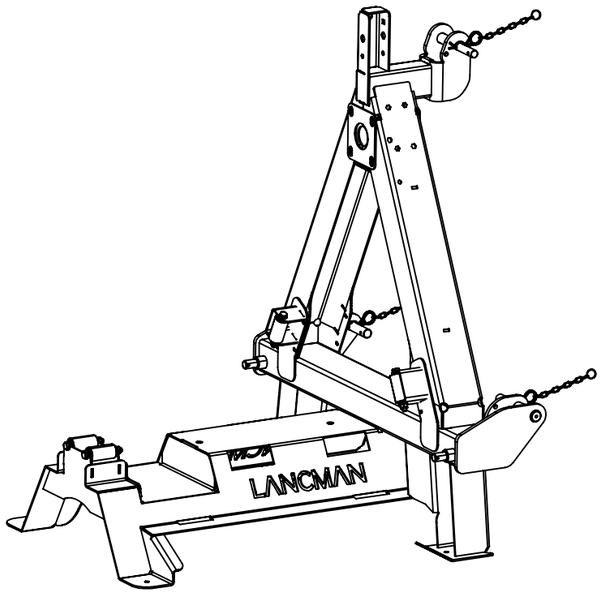

LANCMAN 3003 STH
LANCMAN 3003 H STH

LANCMAN® by GOMARK

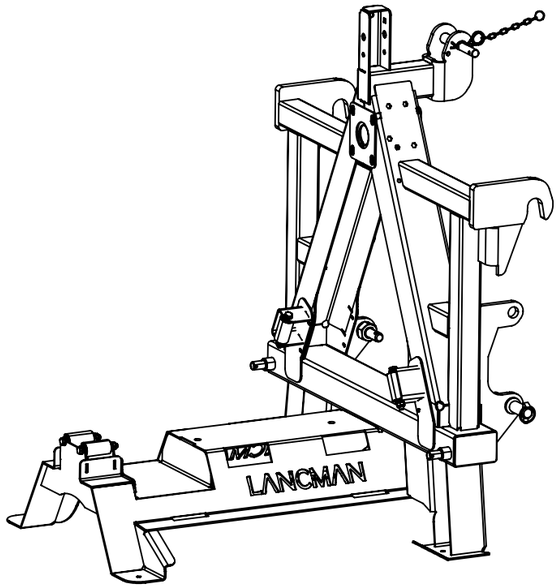

LANCMAN 3003 VF STH
LANCMAN 3003 HVF STH

LANCMAN® by GOMARK

LANCMAN 3003 STH
LANCMAN 3003 H STH

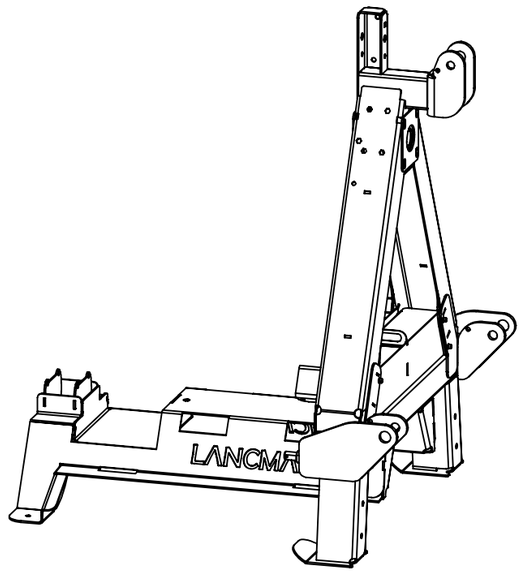

LANCMAN® by GOMARK

LANCMAN 3003 VF STH
LANCMAN 3003 HVF STH

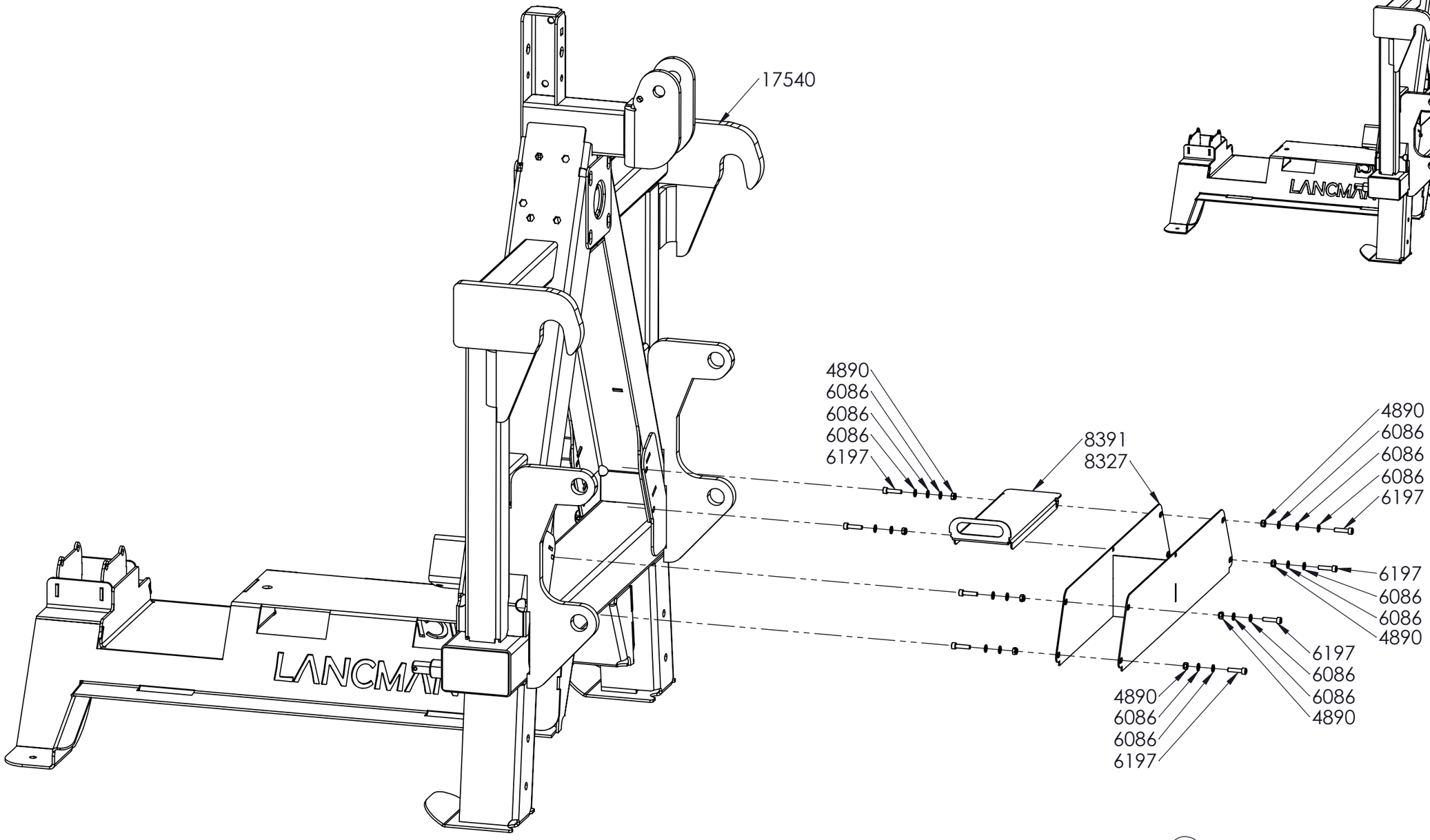

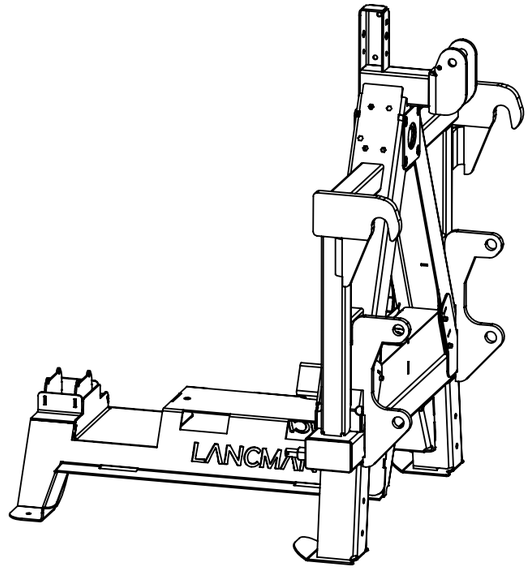

LANCMAN® by GOMARK

LANCMAN 3003 STH

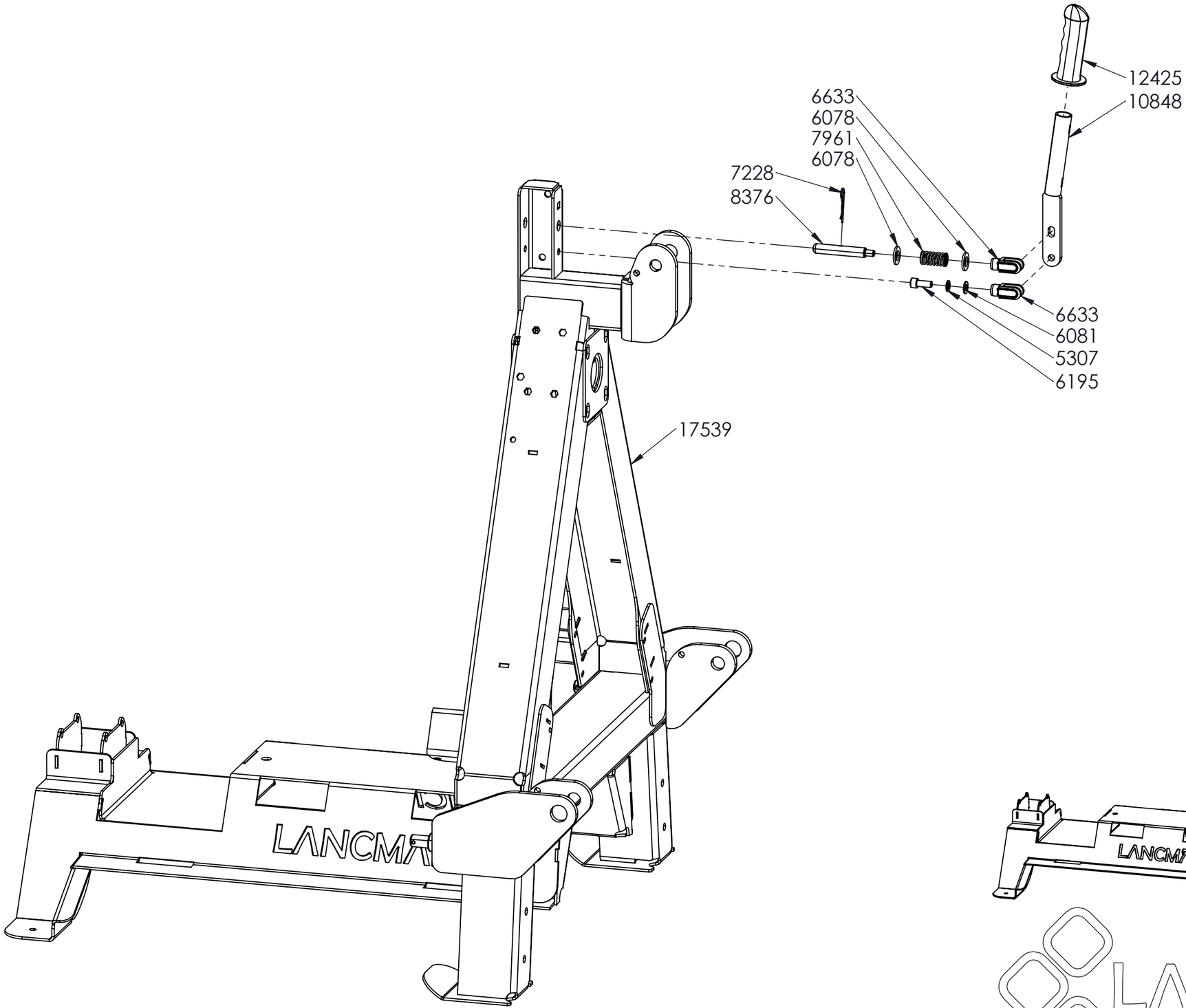

LANCMAN® by GOMARK

LANCMAN 3003 VF STH

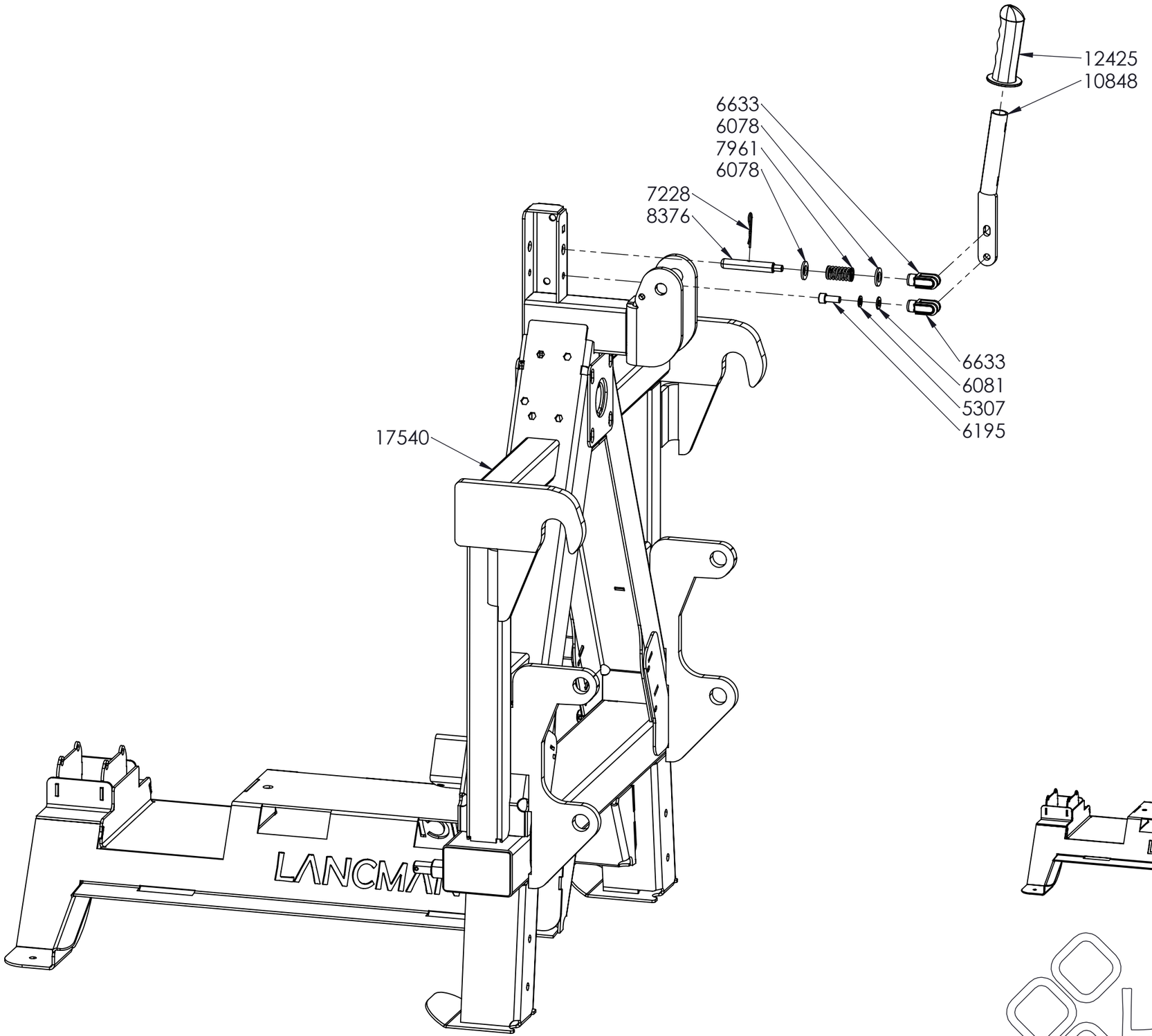

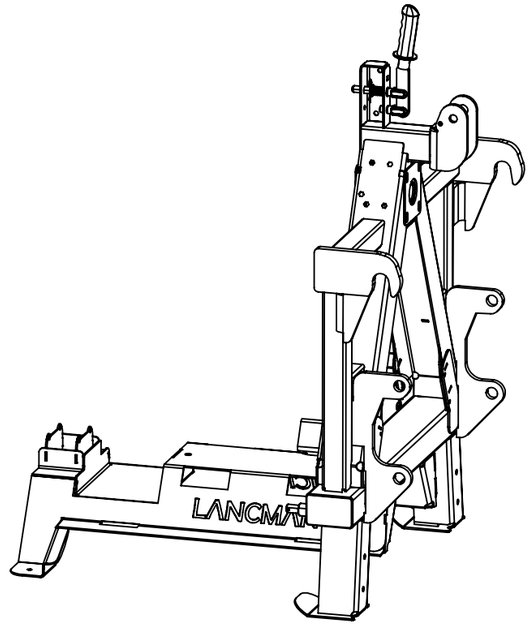

LANCMAN® by GOMARK

LANCMAN 3003 STH

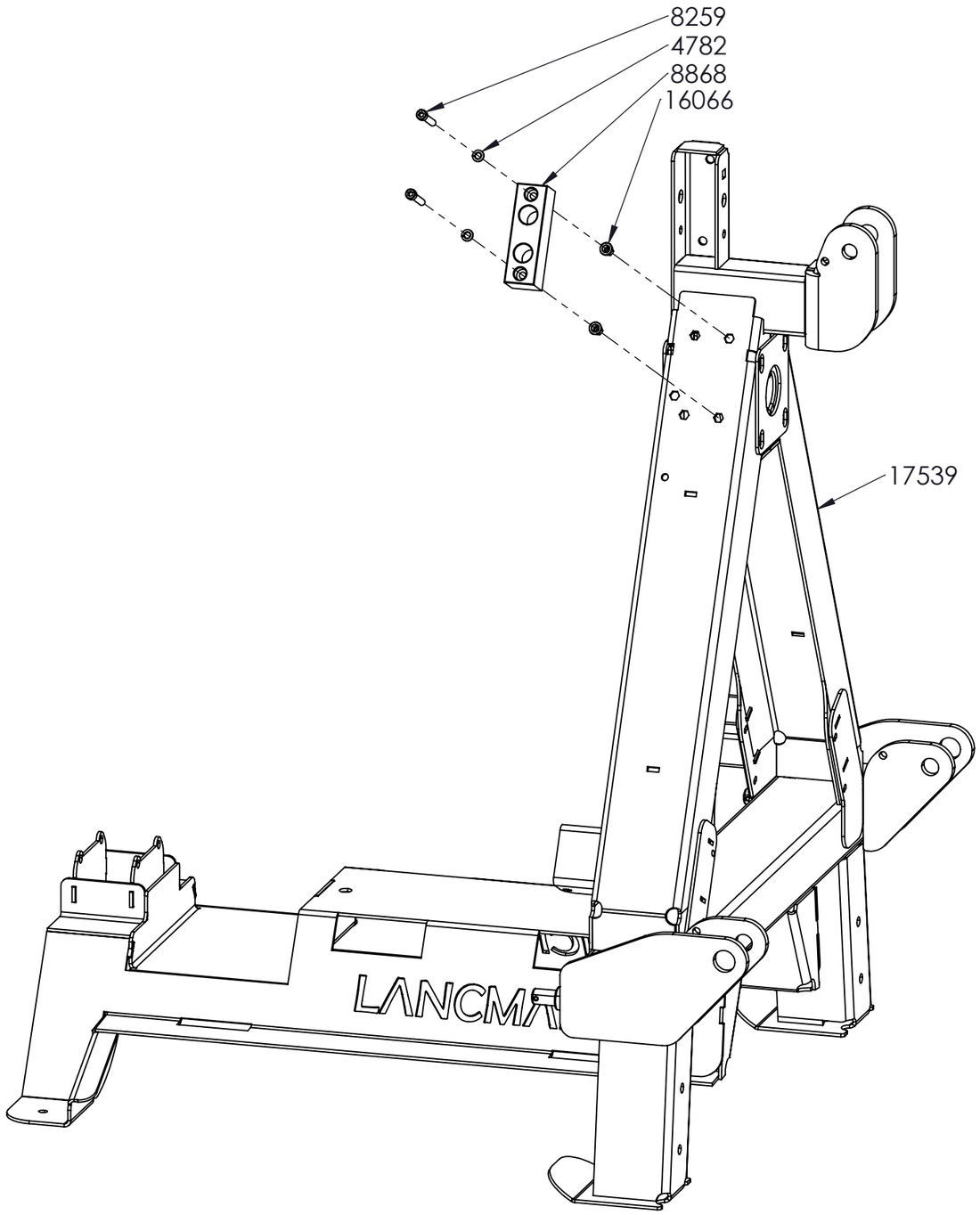

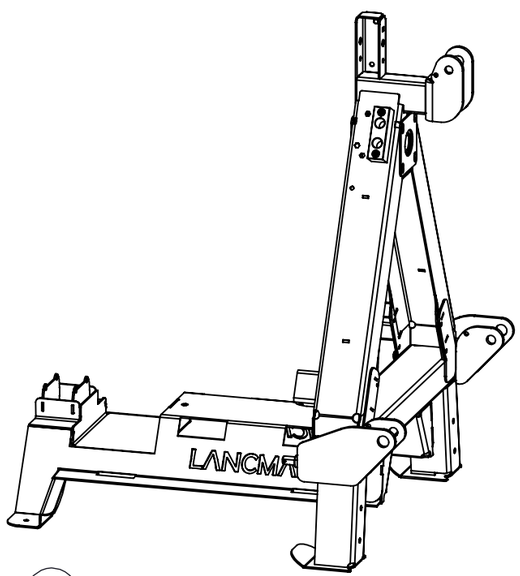

LANCMAN®
by GOMARK

LANCMAN 3003 VF STH

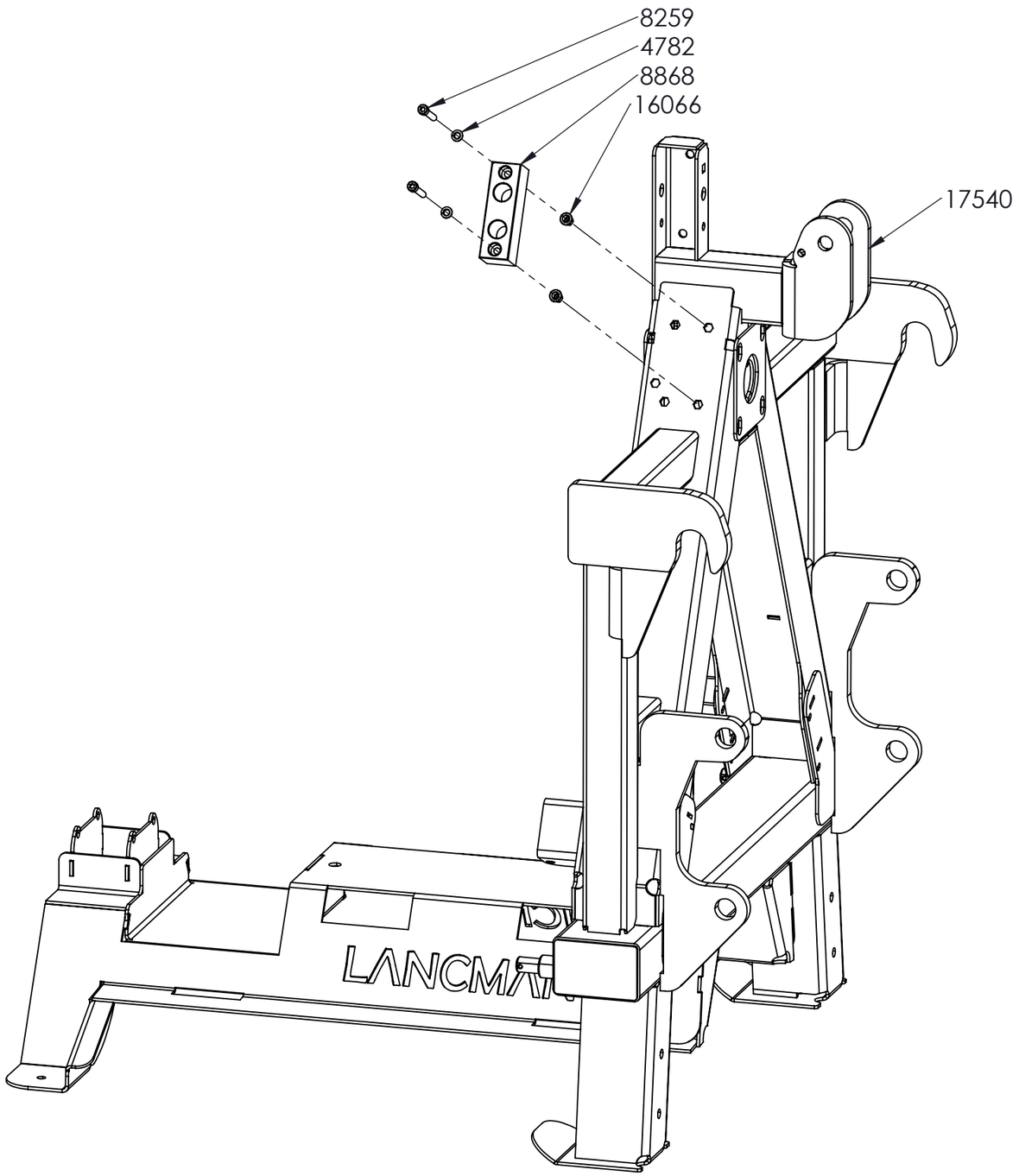

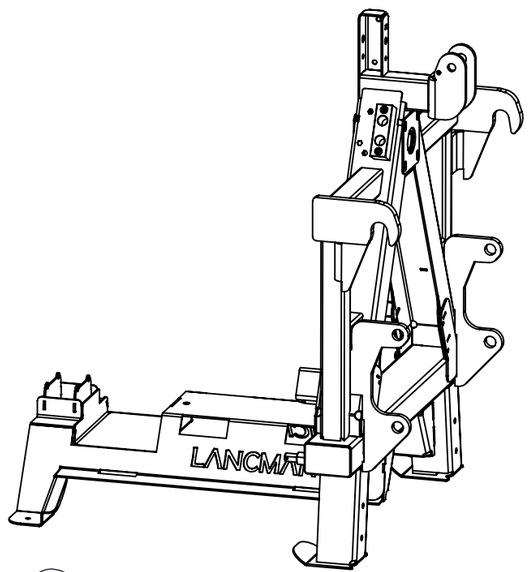

LANCMAN® by GOMARK

LANCMAN 3003 H STH

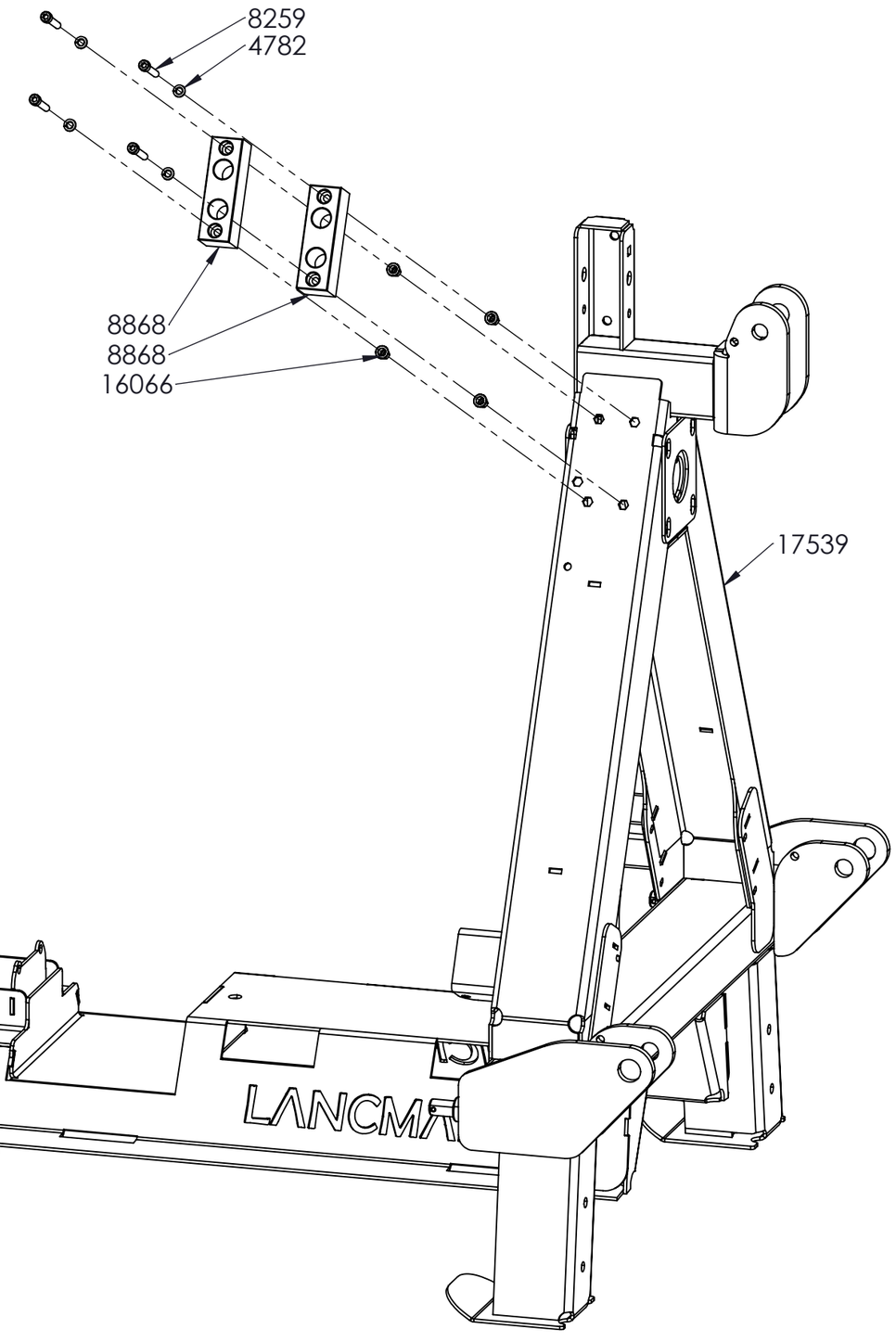

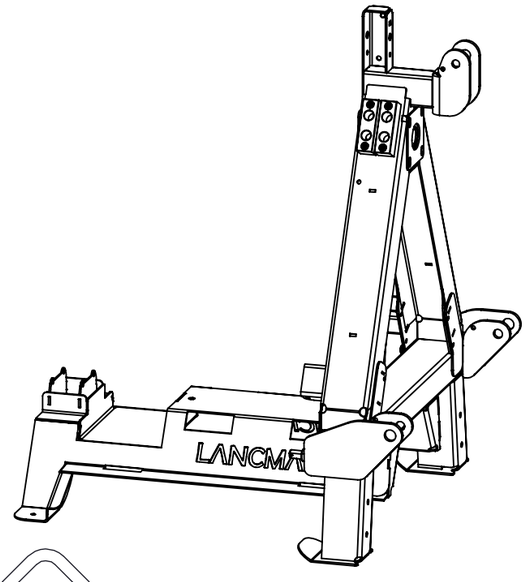

LANCMAN® by GOMARK

LANCMAN 3003 HVF STH

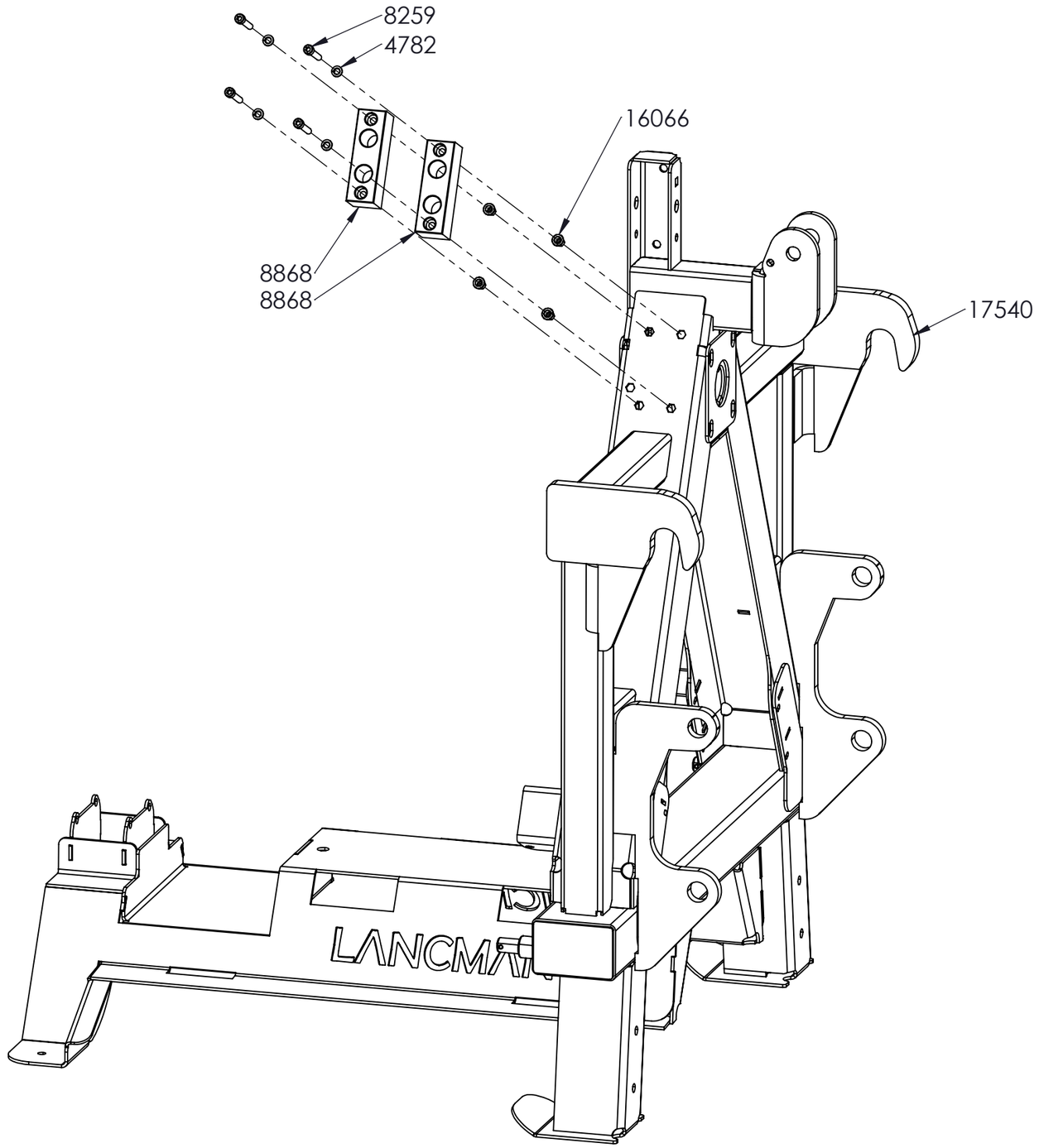

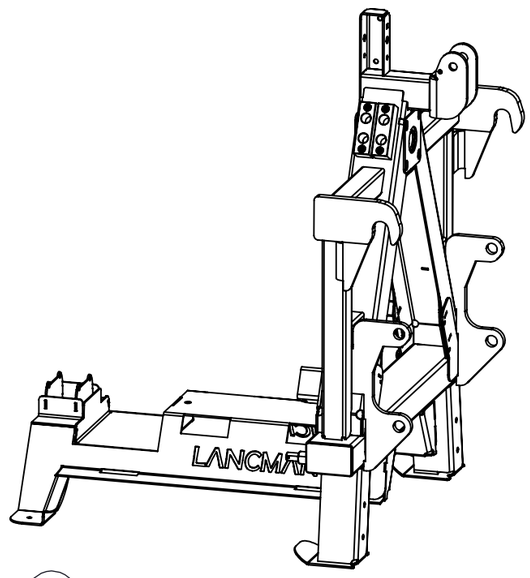

LANCMAN® by GOMARK

LANCMAN 3003 STH
LANCMAN 3003 H STH

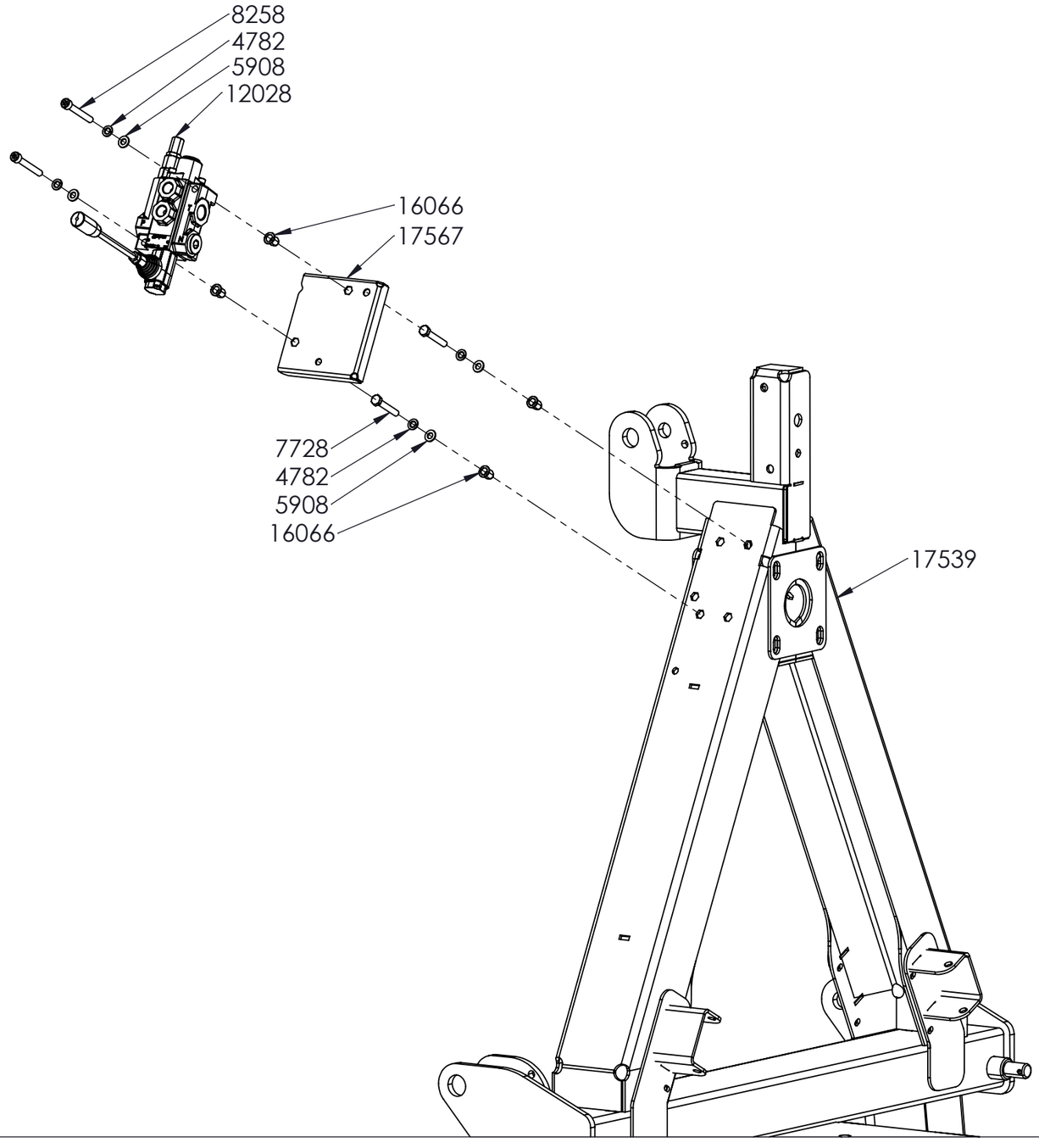

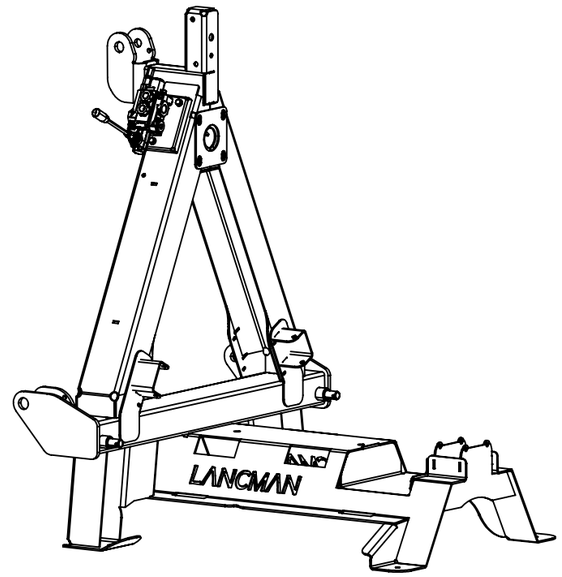

LANCMAN® by GOMARK

LANCMAN 3003 VF STH
LANCMAN 3003 HVF STH

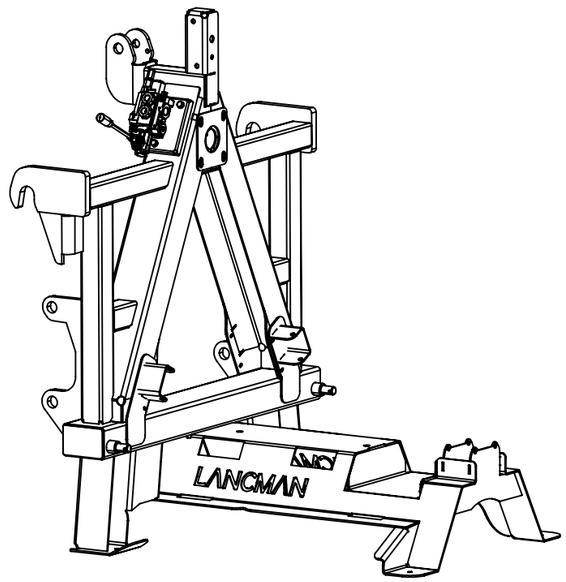

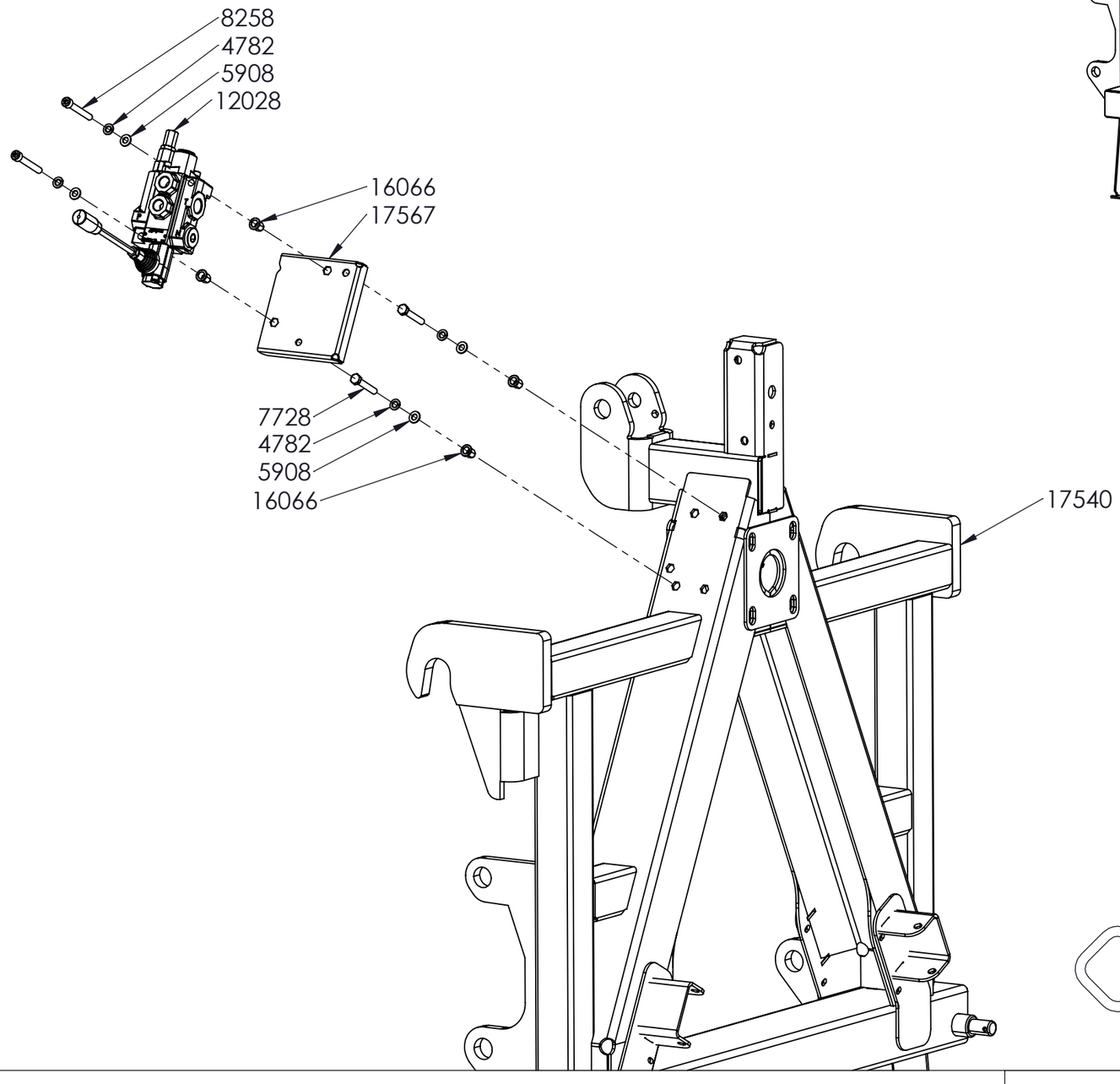

LANCMAN® by GOMARK

LANCMAN 3003 STH
LANCMAN 3003 H STH

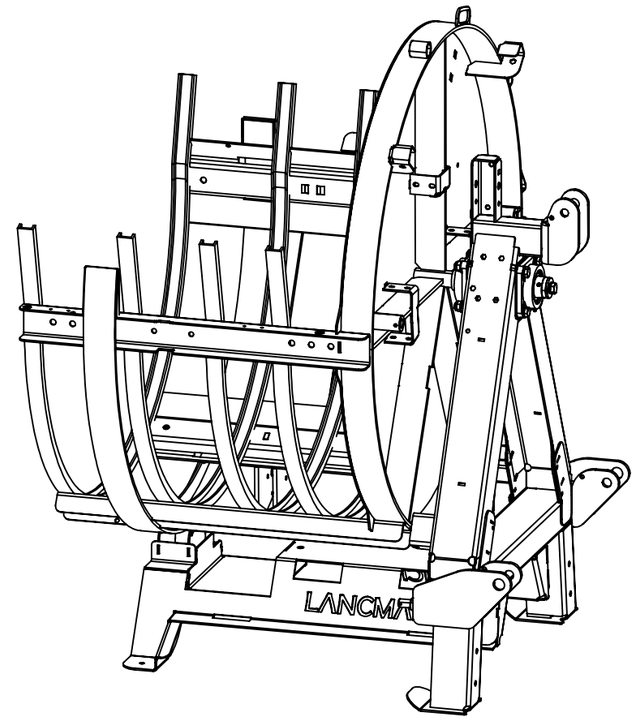

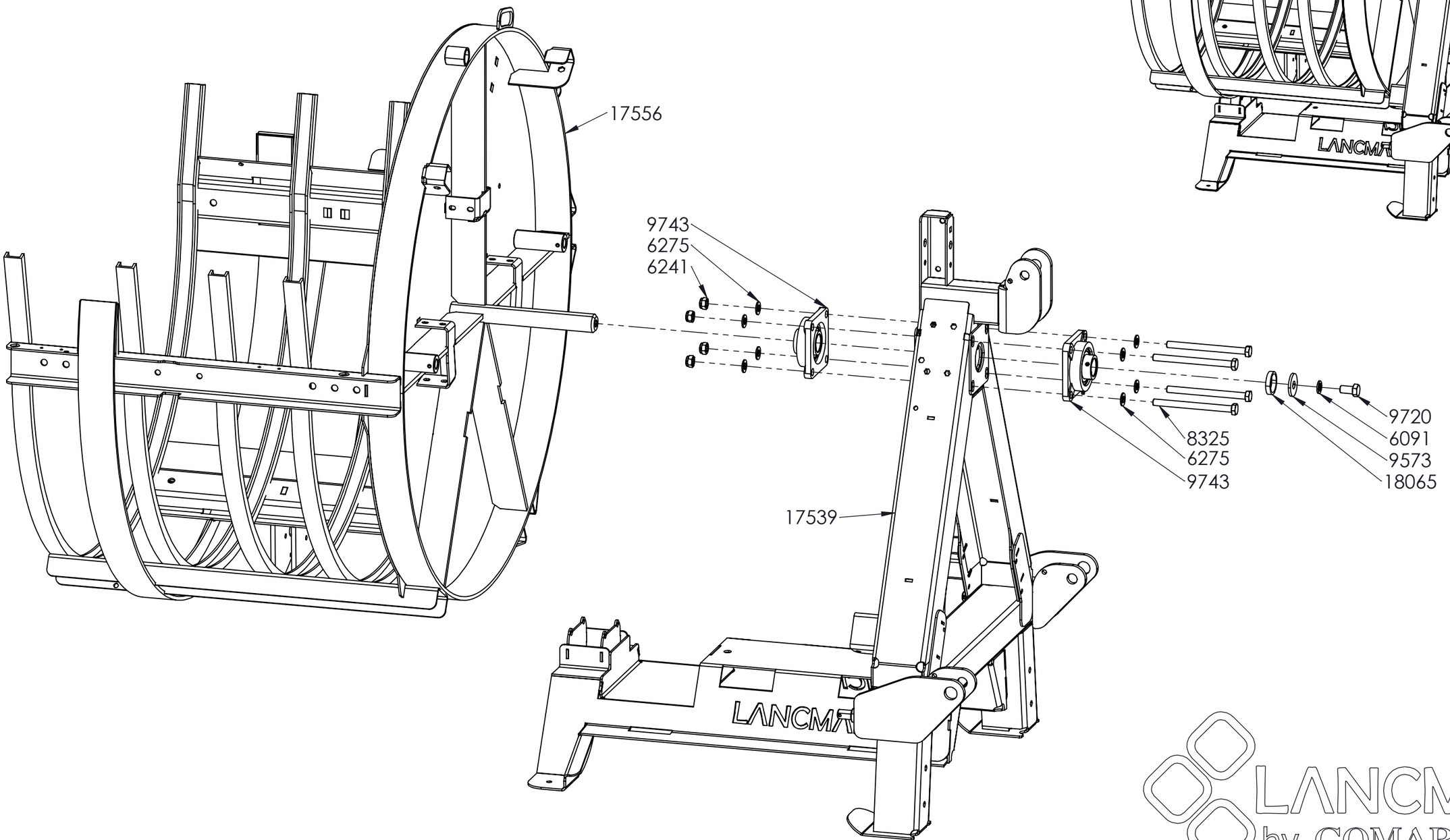

LANCMAN® by GOMARK

LANCMAN 3003 VF STH
LANCMAN 3003 HVF STH

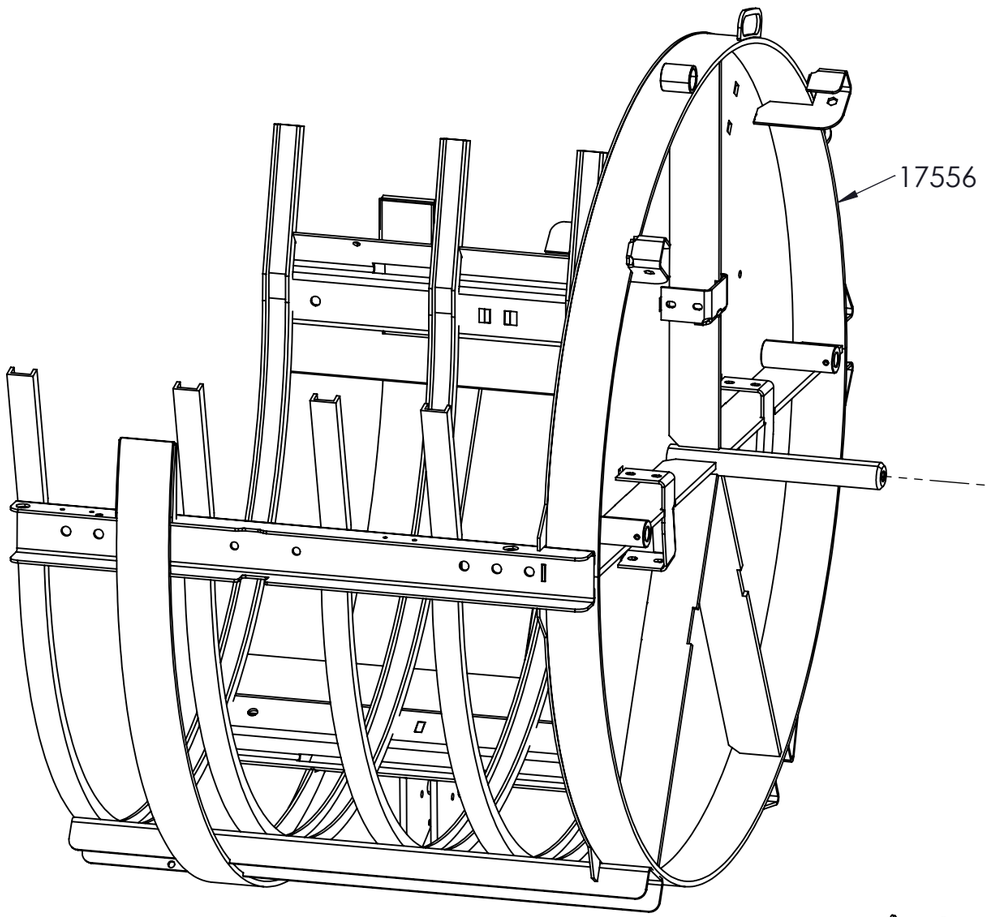

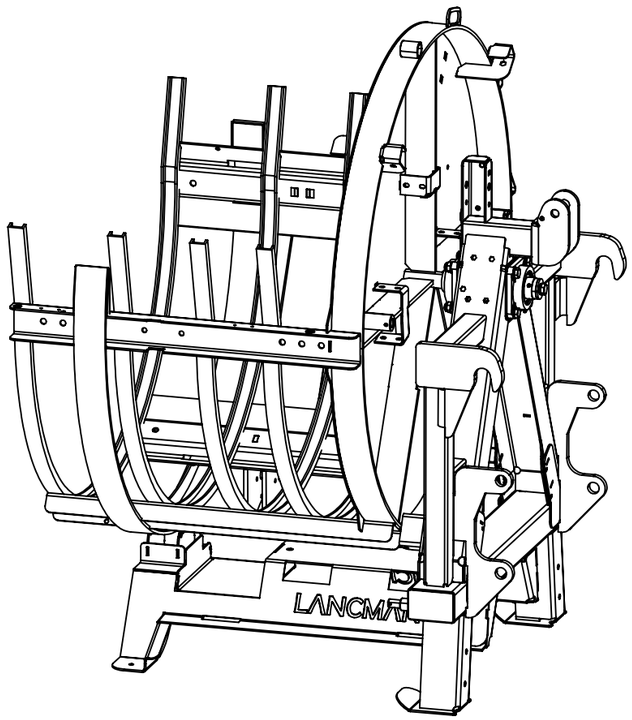

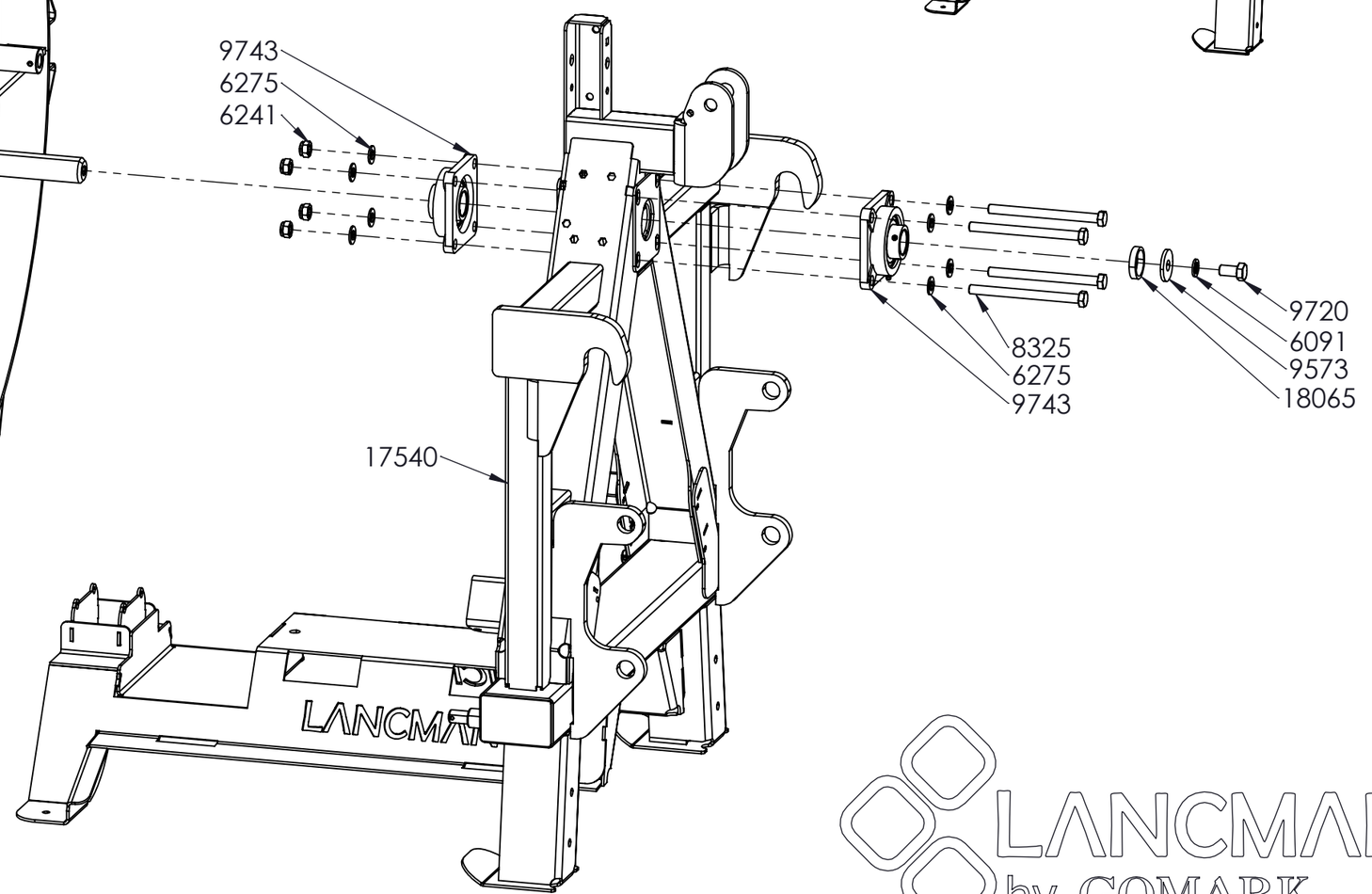

LANCMAN® by GOMARK

LANCMAN 3003 STH
LANCMAN 3003 VF STH

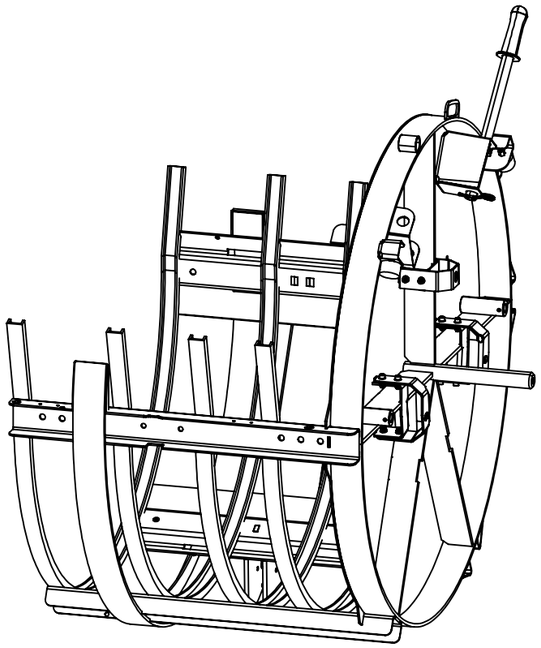

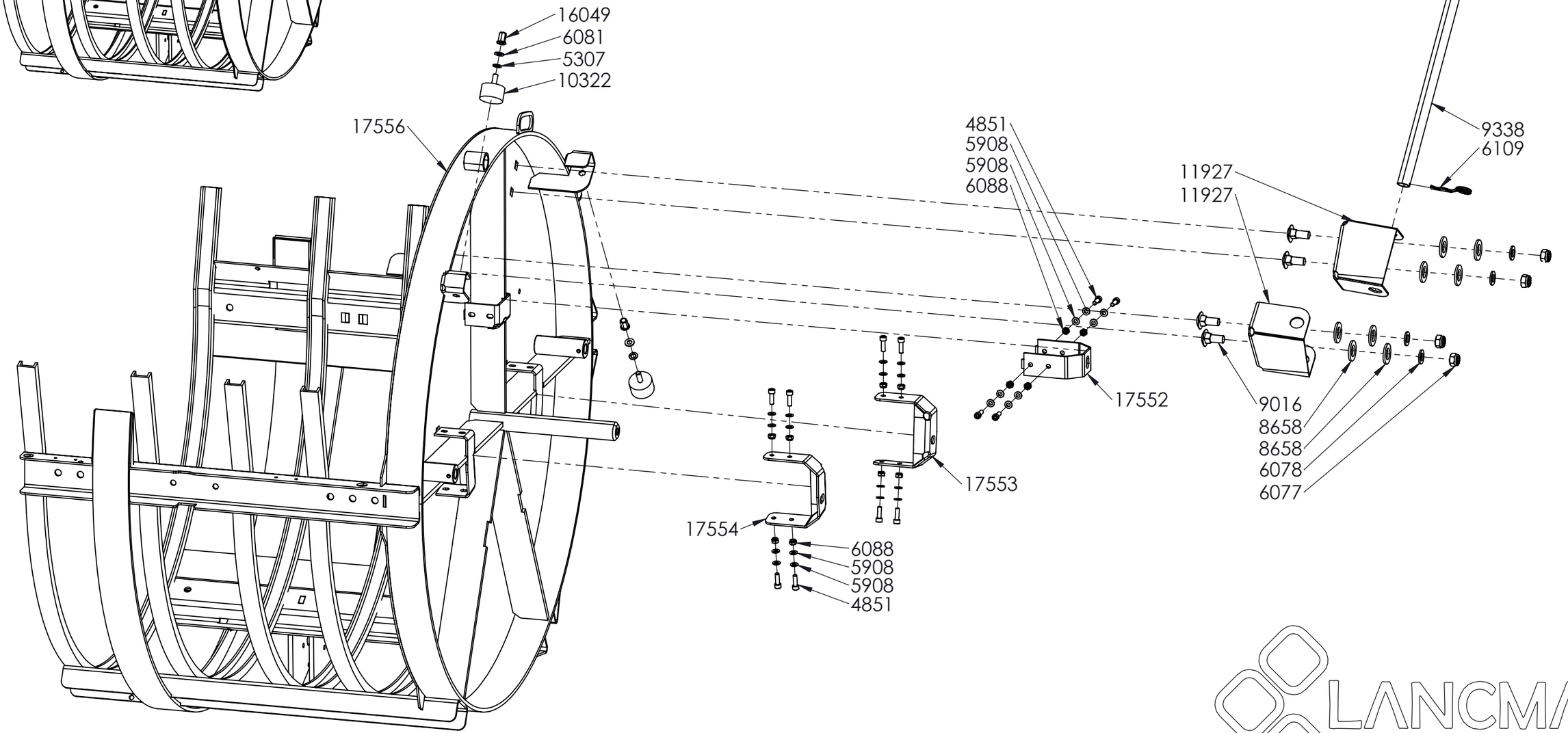

LANCMAN® by GOMARK

LANCMAN 3003 H STH
LANCMAN 3003 HVF STH

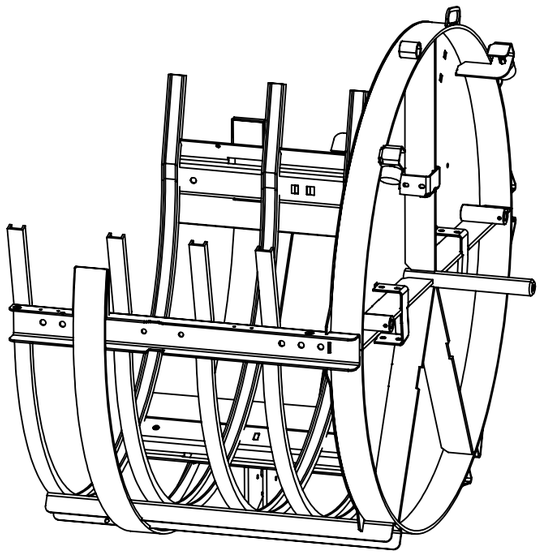

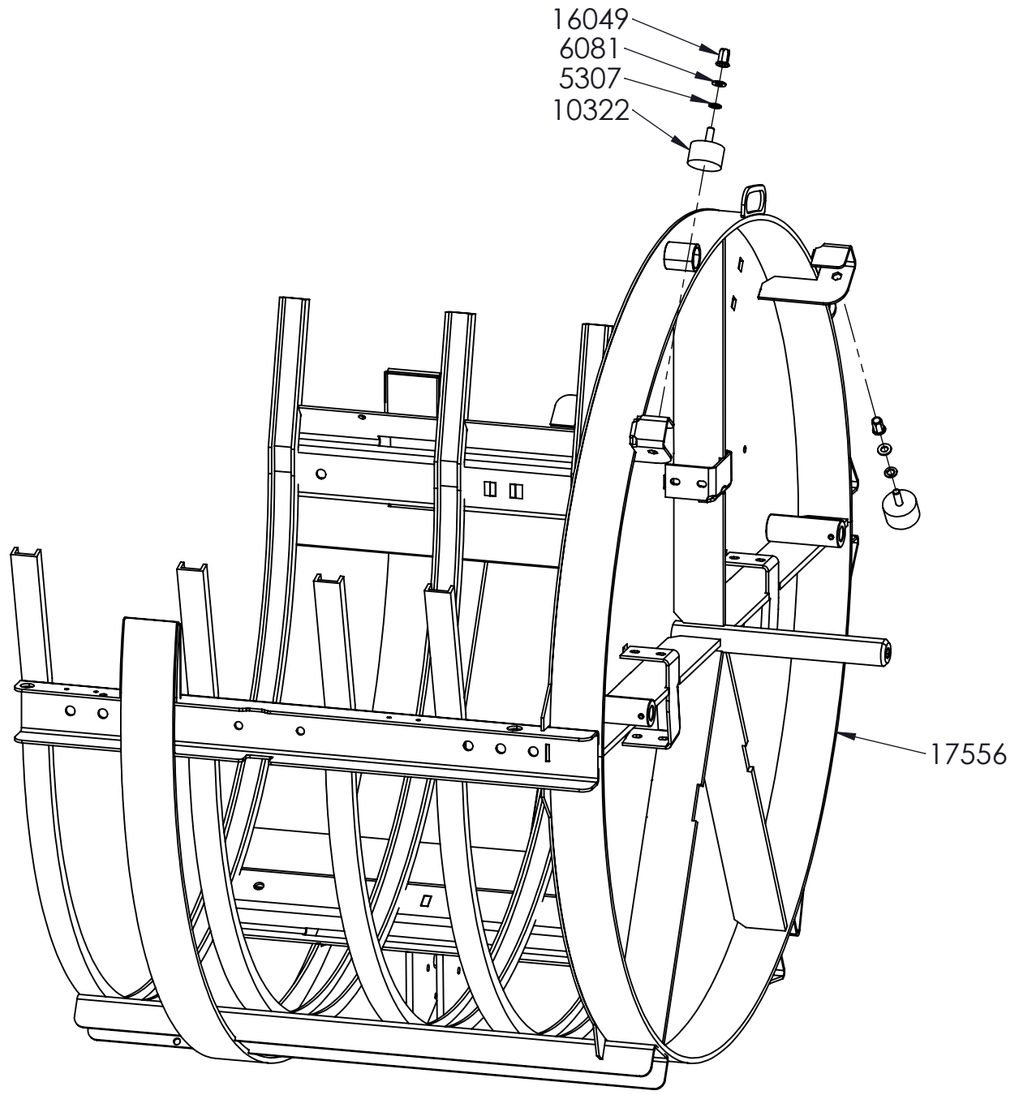

LANCMAN® by GOMARK

LANCMAN 3003 H STH

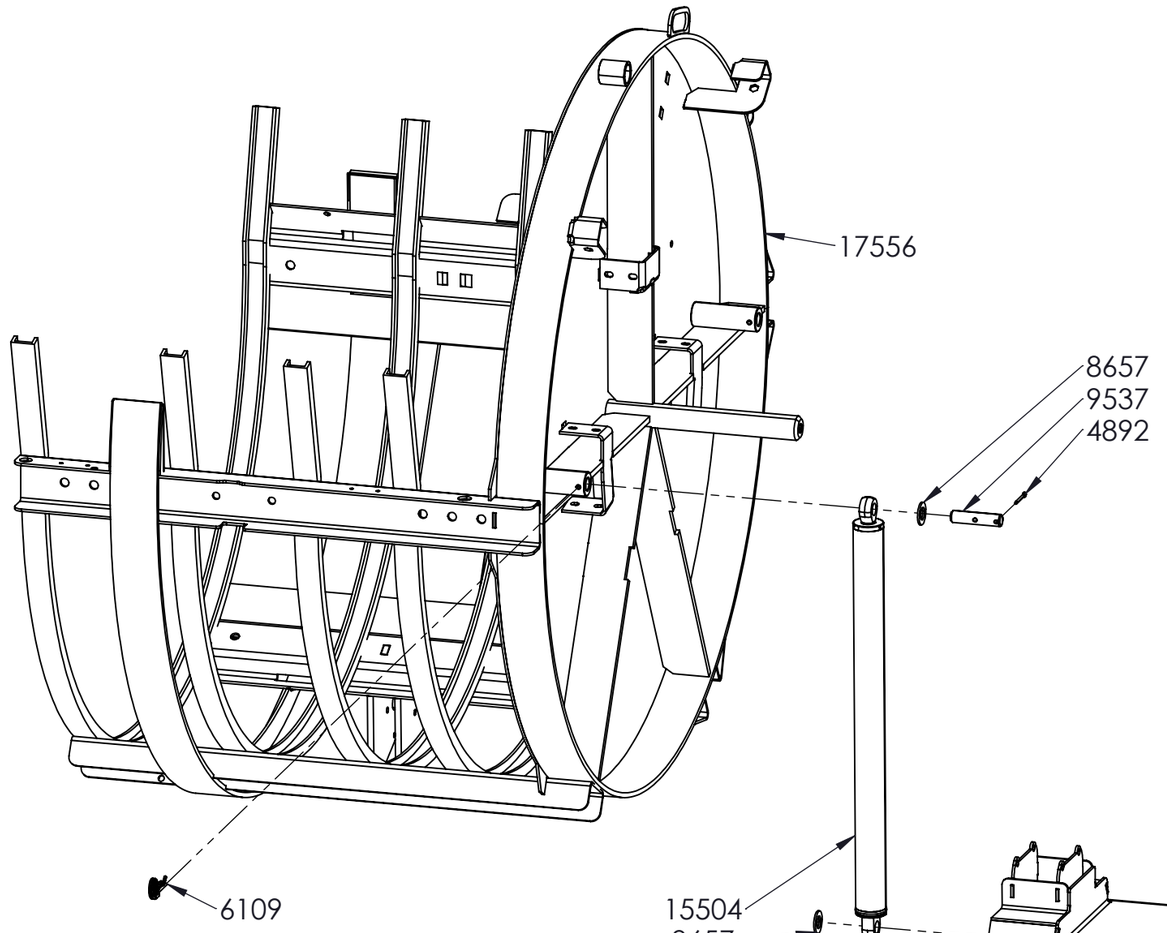

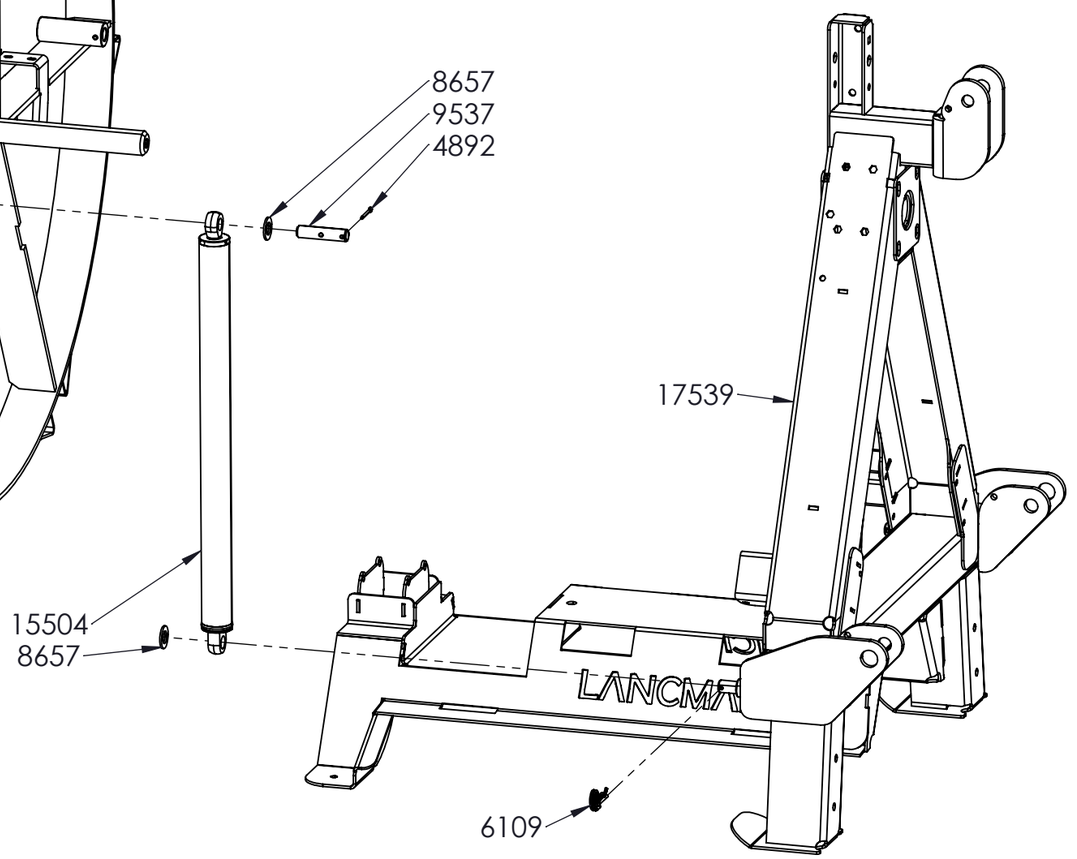

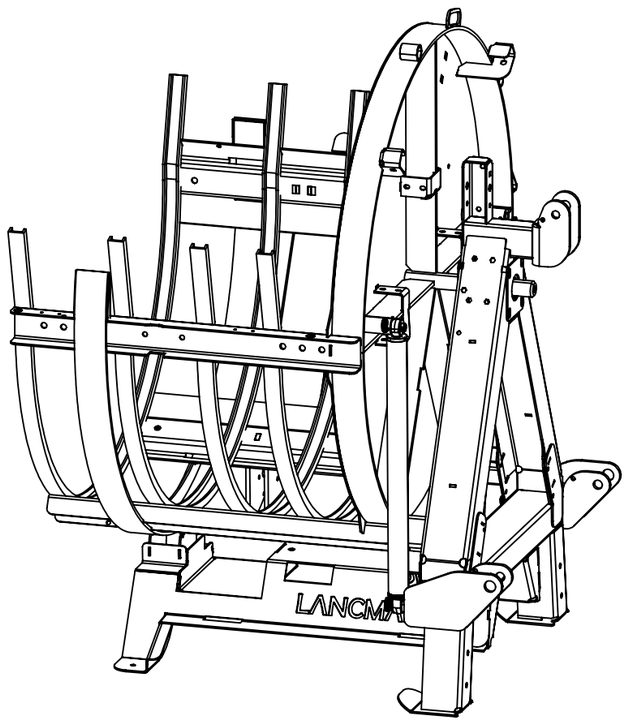

LANCMAN® by GOMARK

LANCMAN 3003 HVF STH

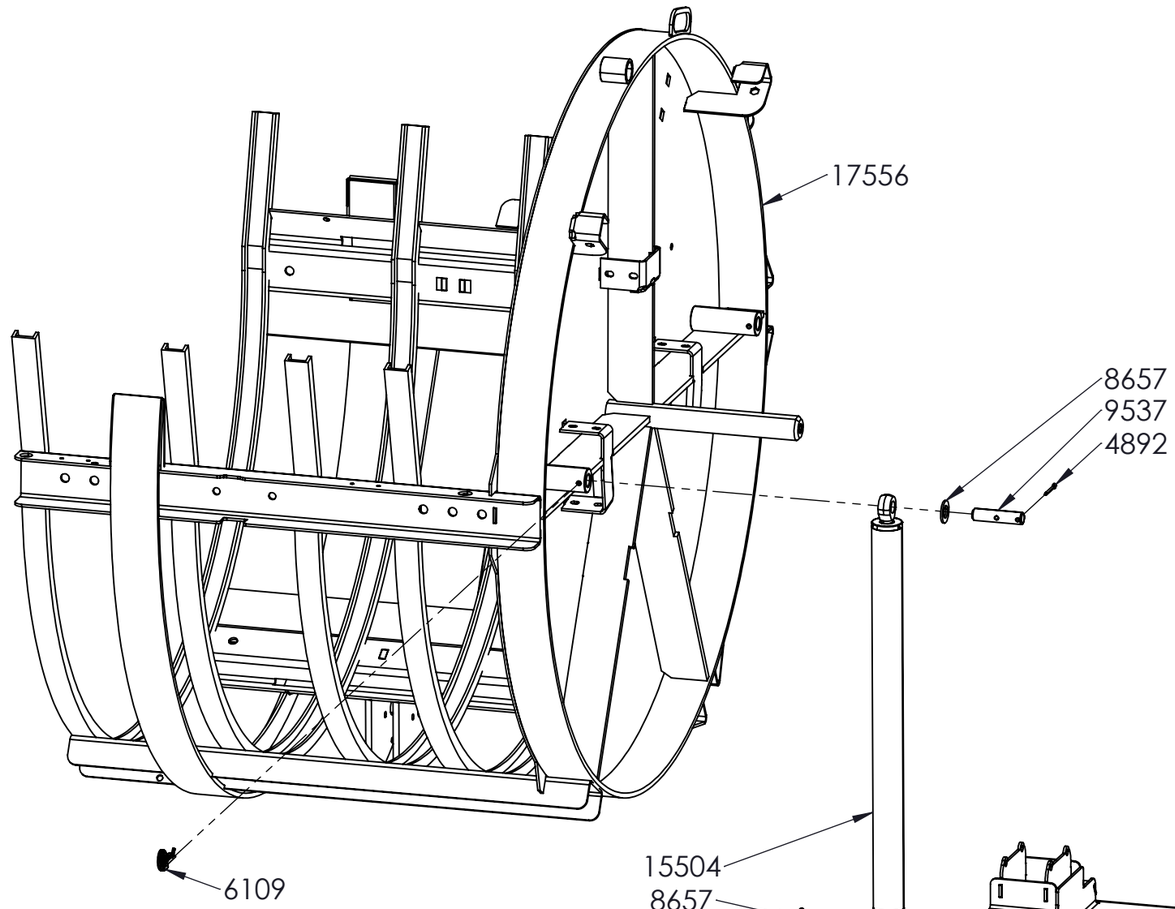

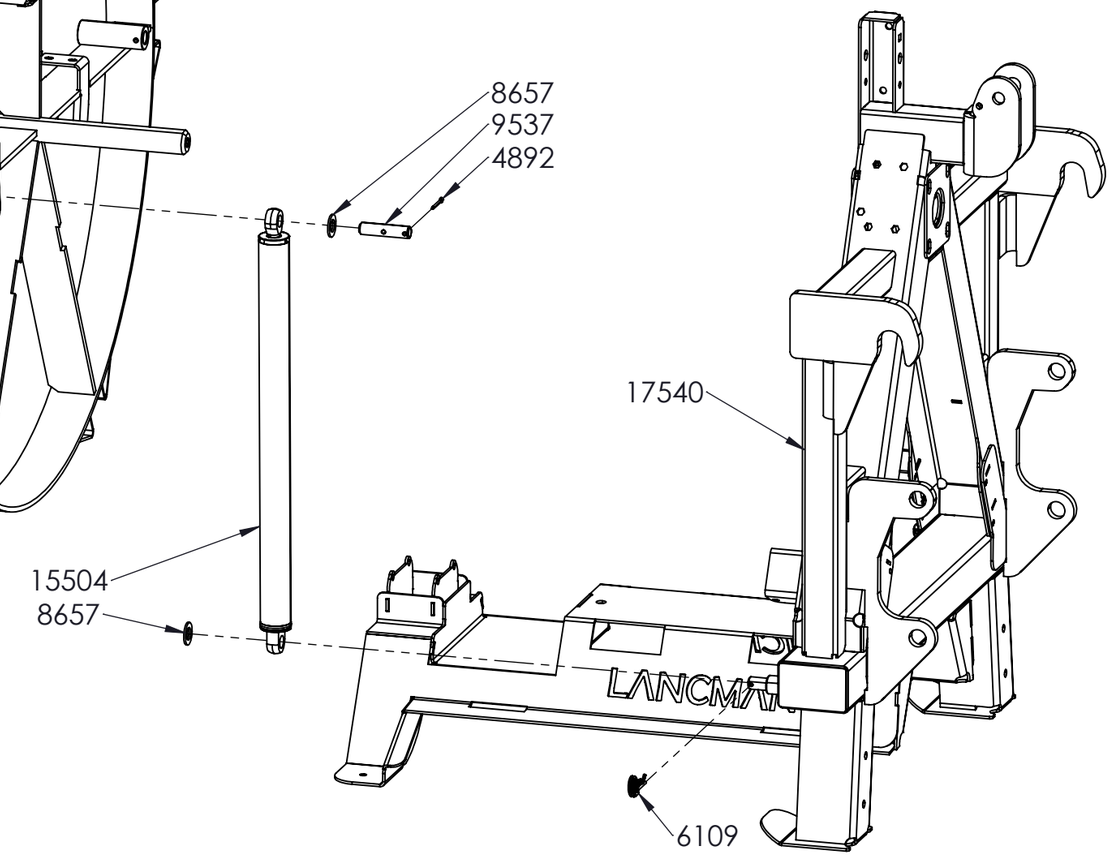

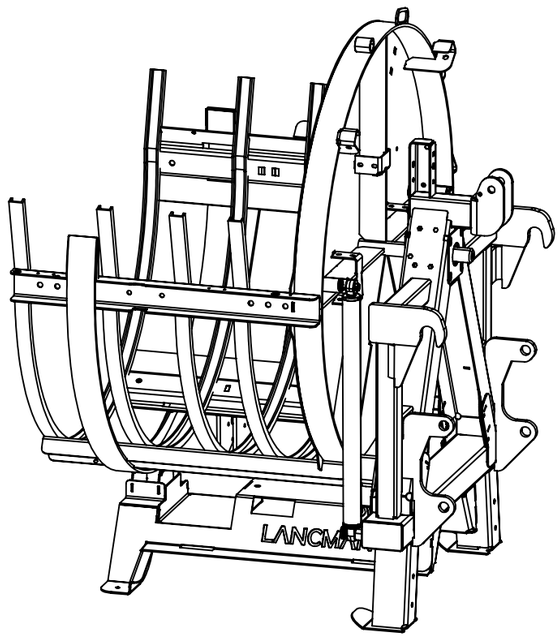

LANCMAN® by GOMARK

LANCMAN 3003 STH
LANCMAN 3003 H STH
LANCMAN 3003 VF STH
LANCMAN 3003 HVF STH

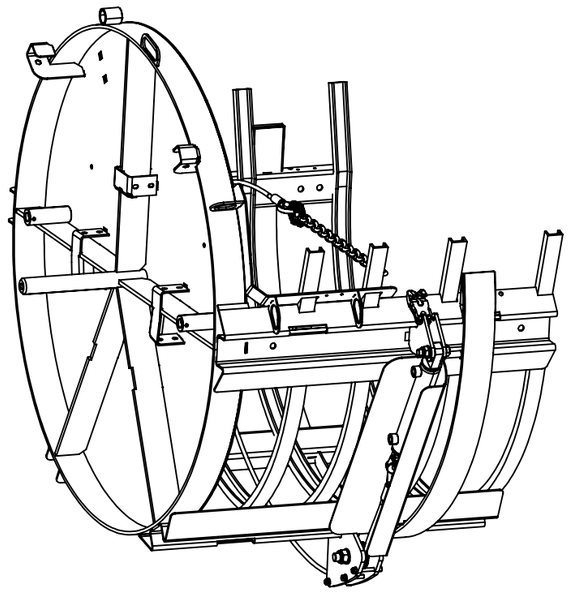

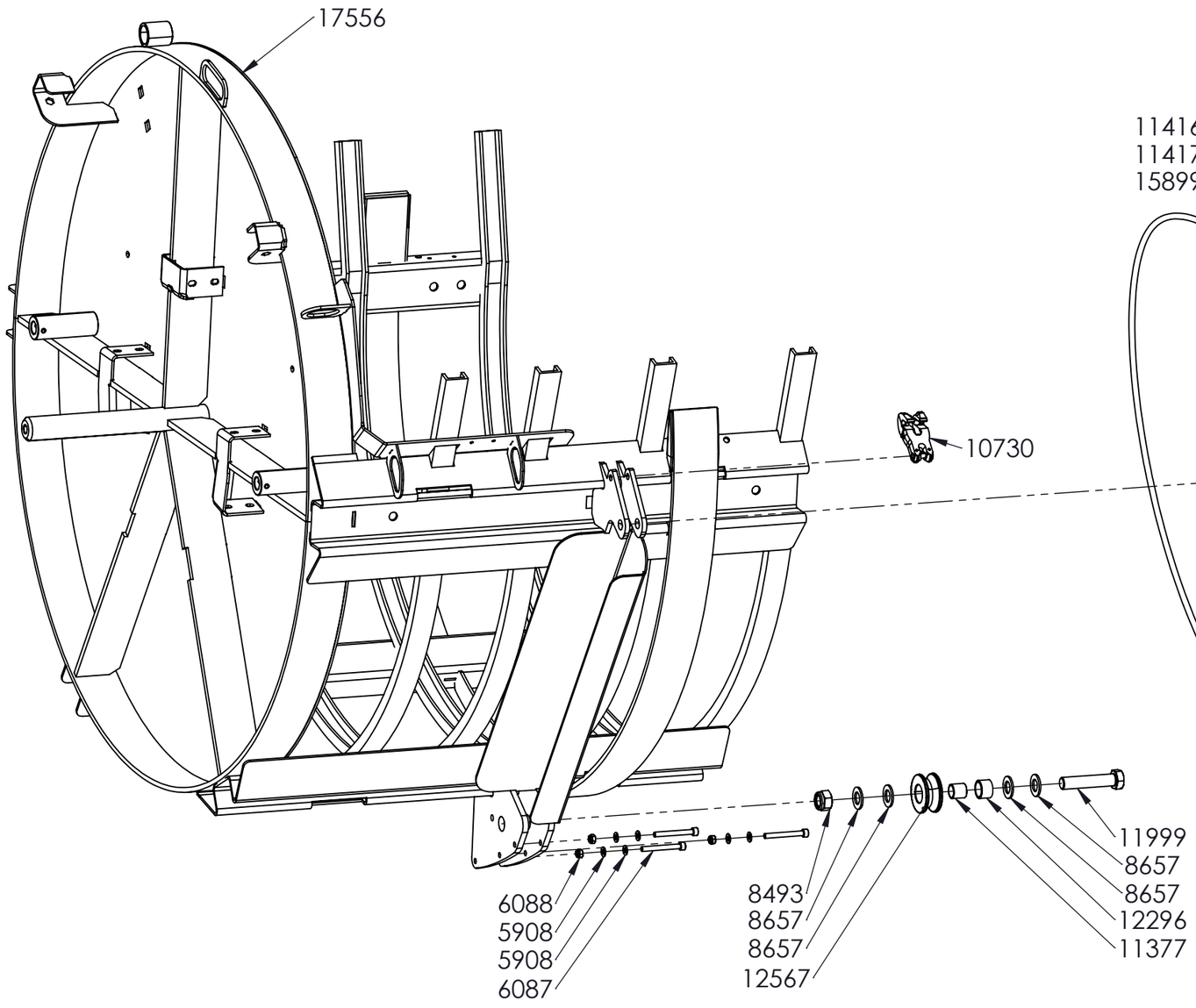

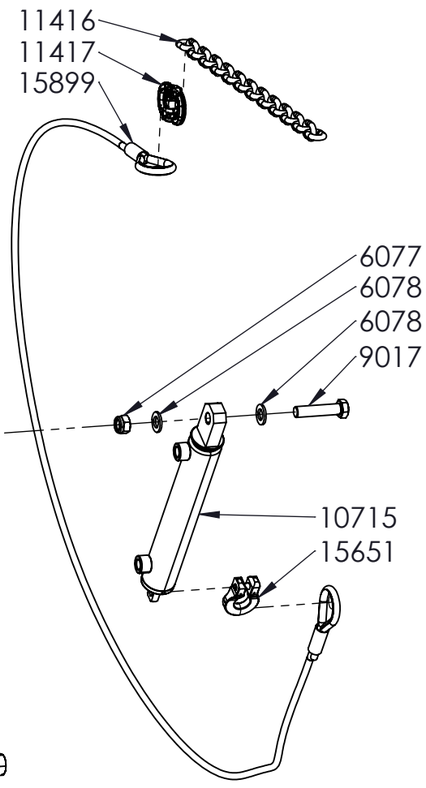

LANCMAN® by GOMARK

LANCMAN 3003 H STH
LANCMAN 3003 HVF STH

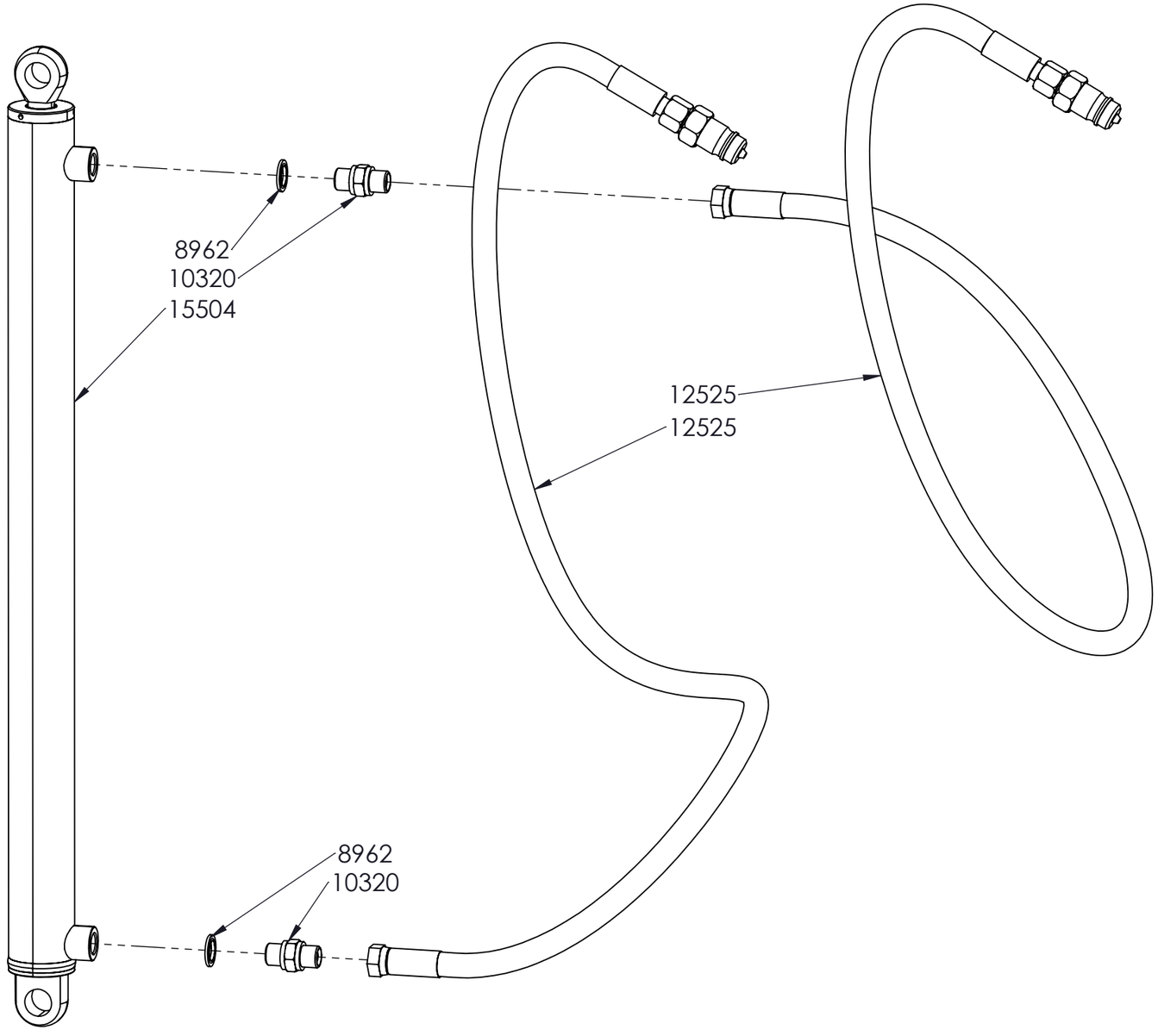

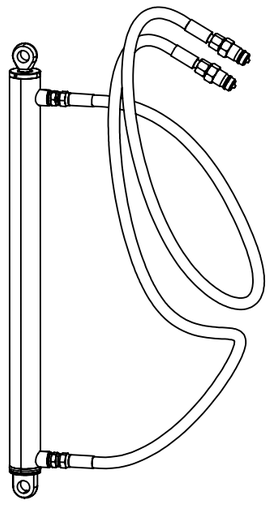

LANCMAN® by GOMARK

LANCMAN 3003 STH
LANCMAN 3003 H STH
LANCMAN 3003 VF STH
LANCMAN 3003 HVF STH

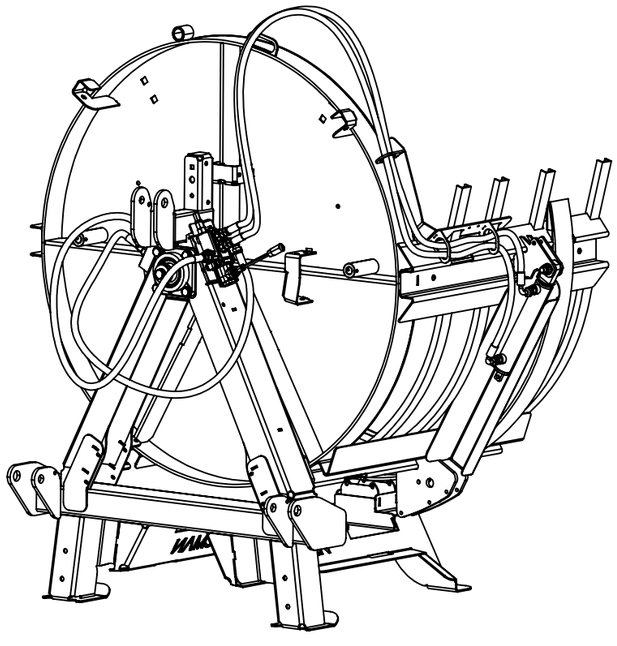

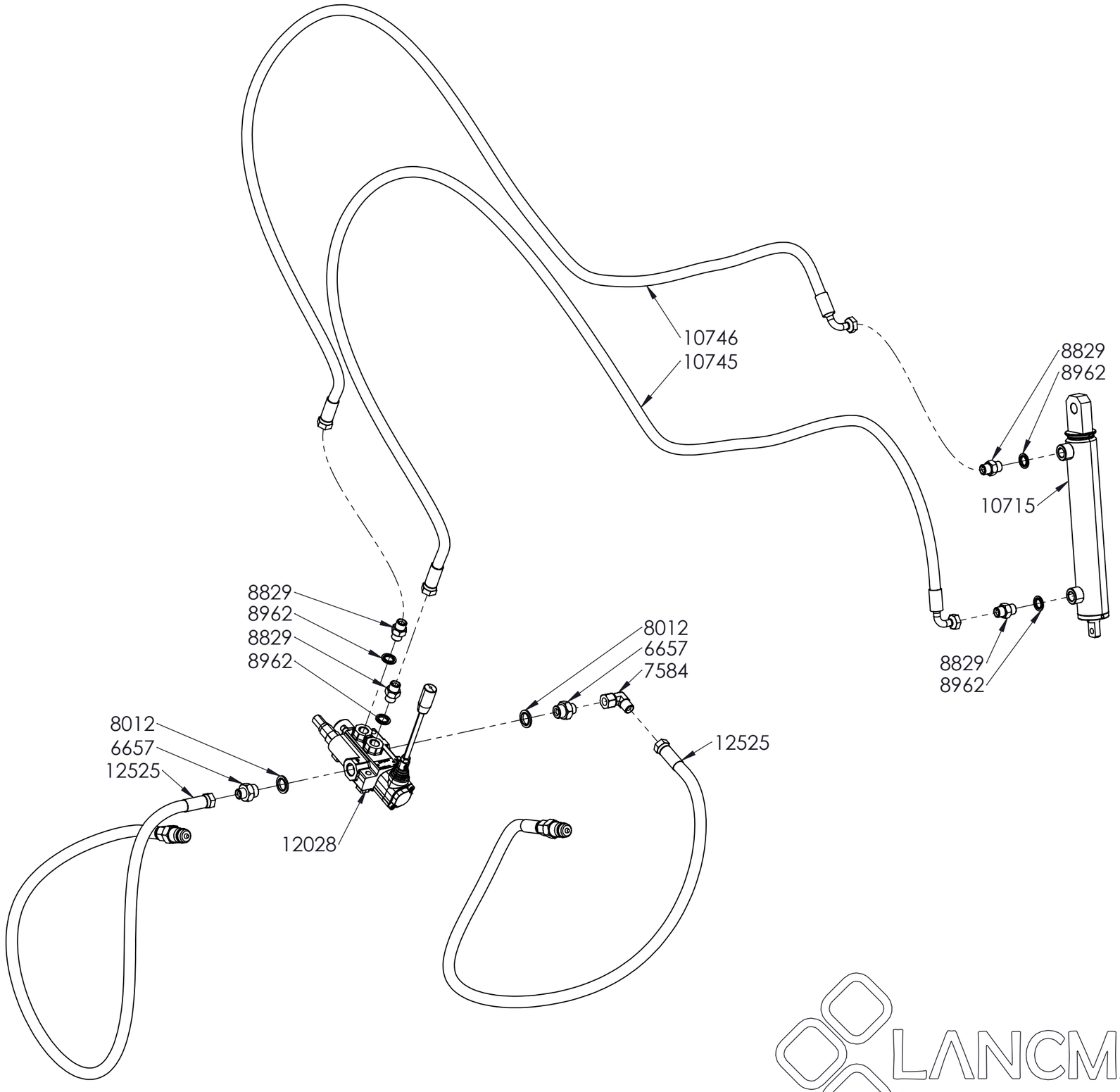

LANCMAN® by GOMARK