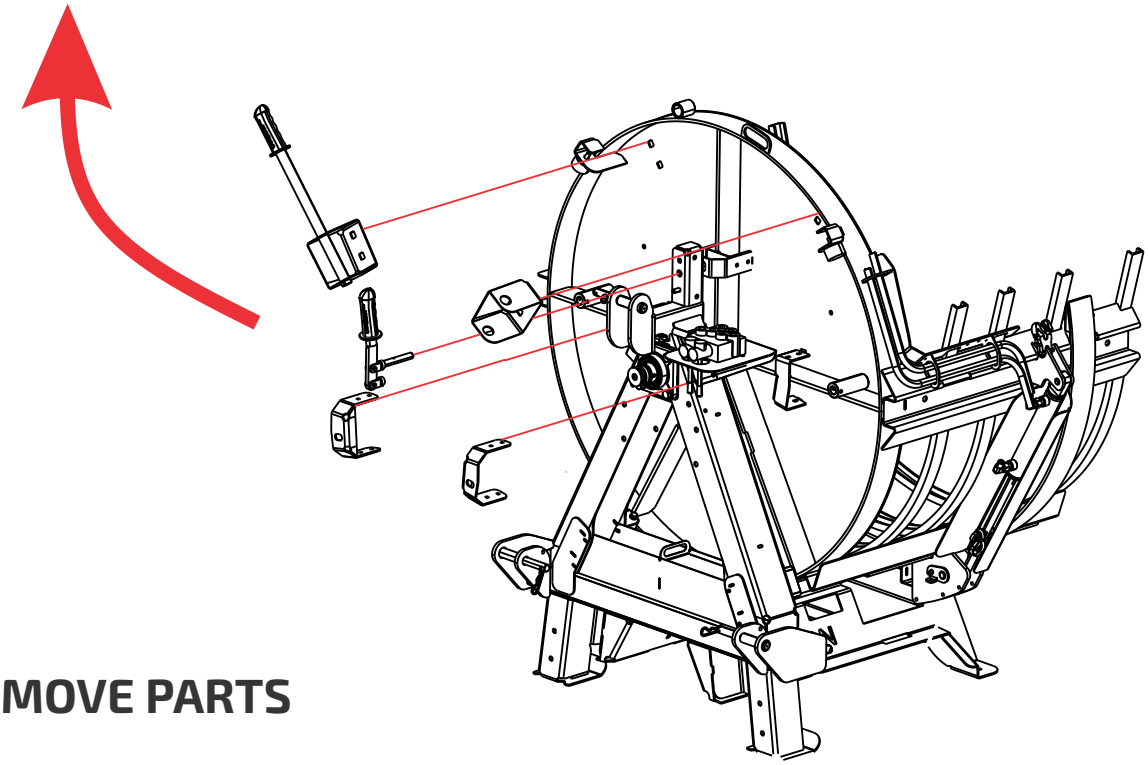

1. REMOVE PARTS

2. INSTALL CYLINDER

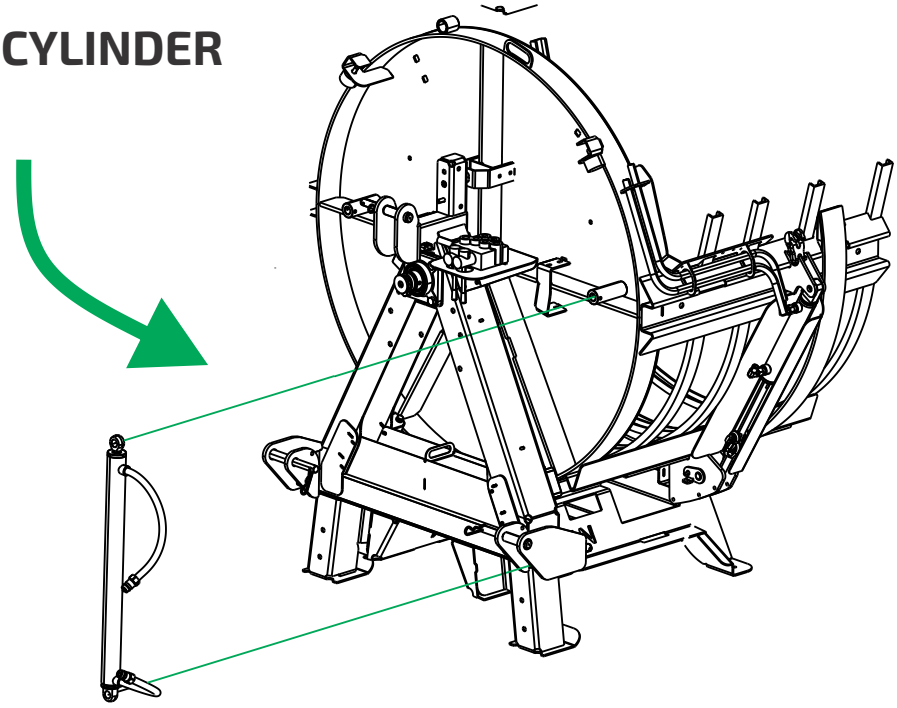

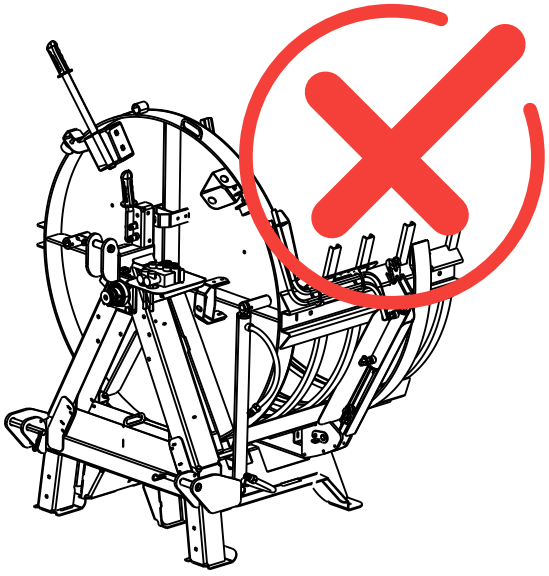

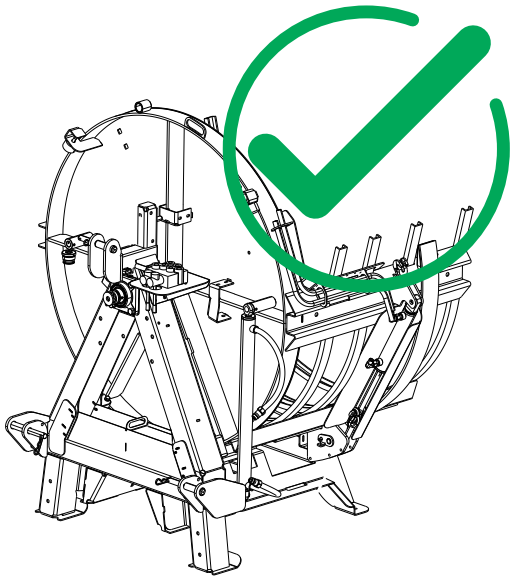

LANCMAN®