LANCMAN 2501 SH
LANCMAN 2501 H SH
LANCMAN 2501 VF SH
LANCMAN 2501 HVF SH

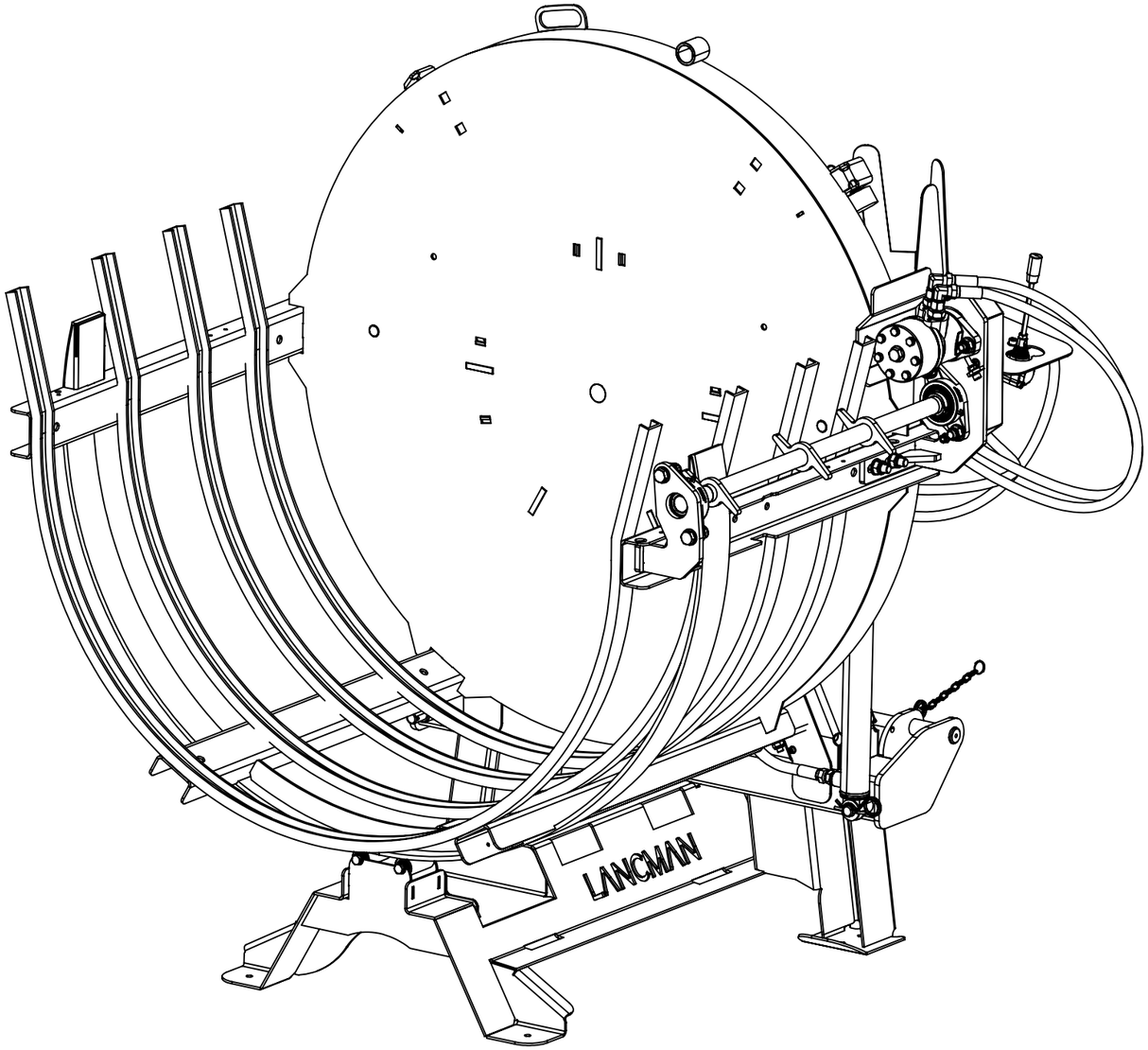

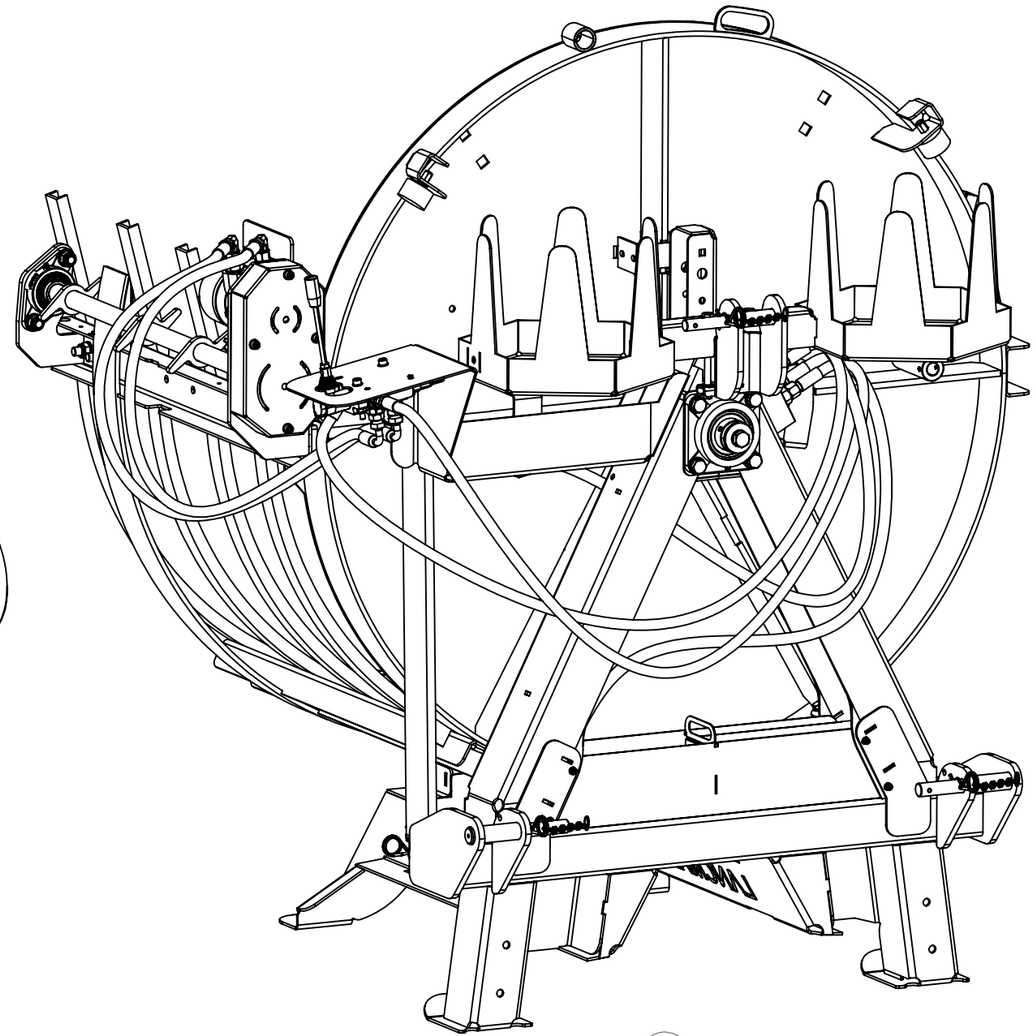

LANCMAN® by GOMARK

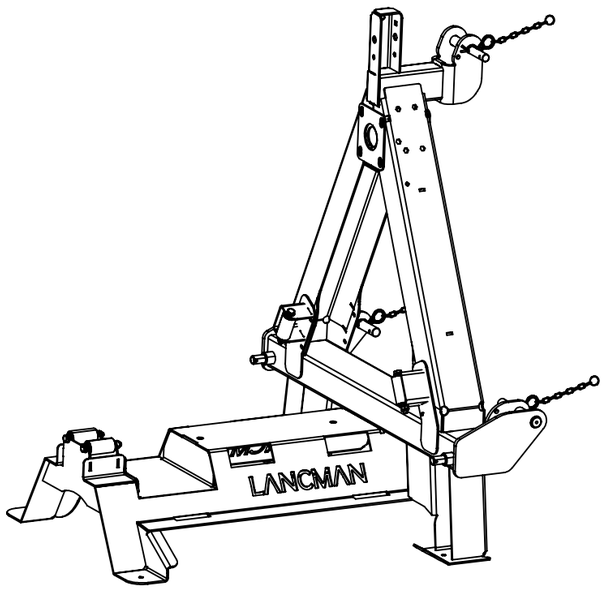

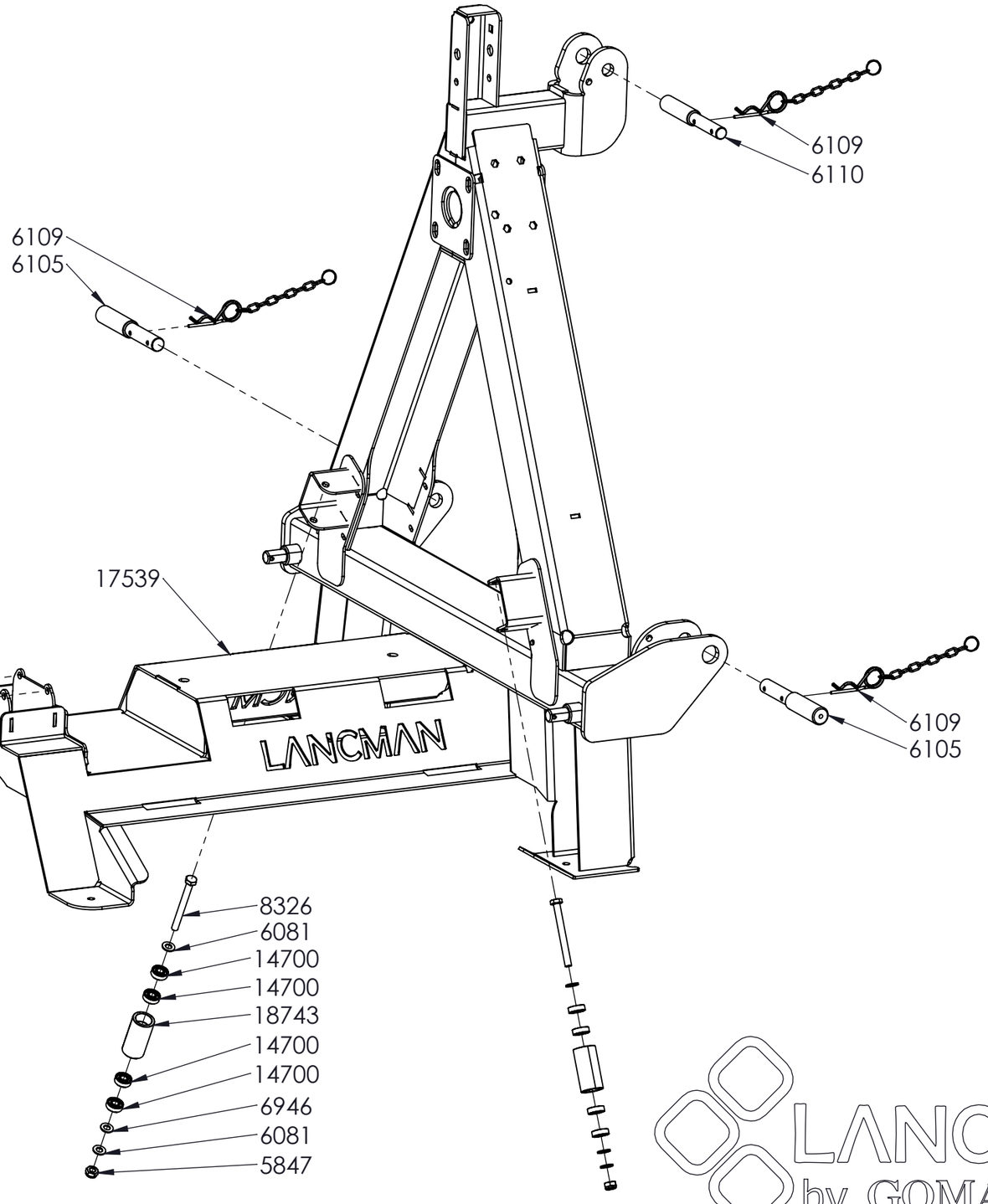

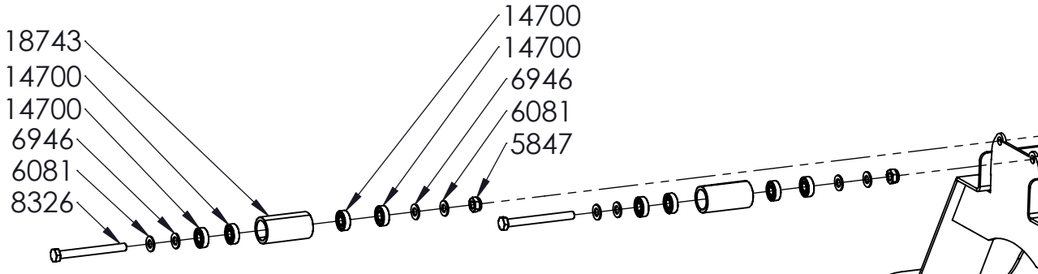

LANCMAN 2501 SH
LANCMAN 2501 H SH

LANCMAN® by GOMARK

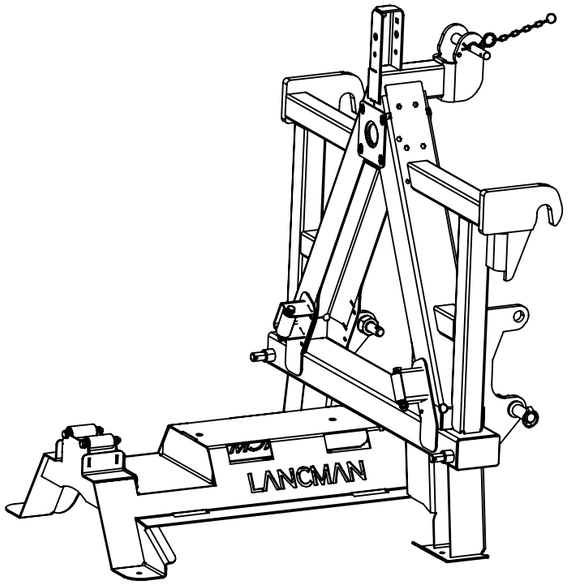

LANCMAN 2501 VF SH
LANCMAN 2501 HVF SH

LANCMAN® by GOMARK

LANCMAN 2501 SH
LANCMAN 2501 H SH

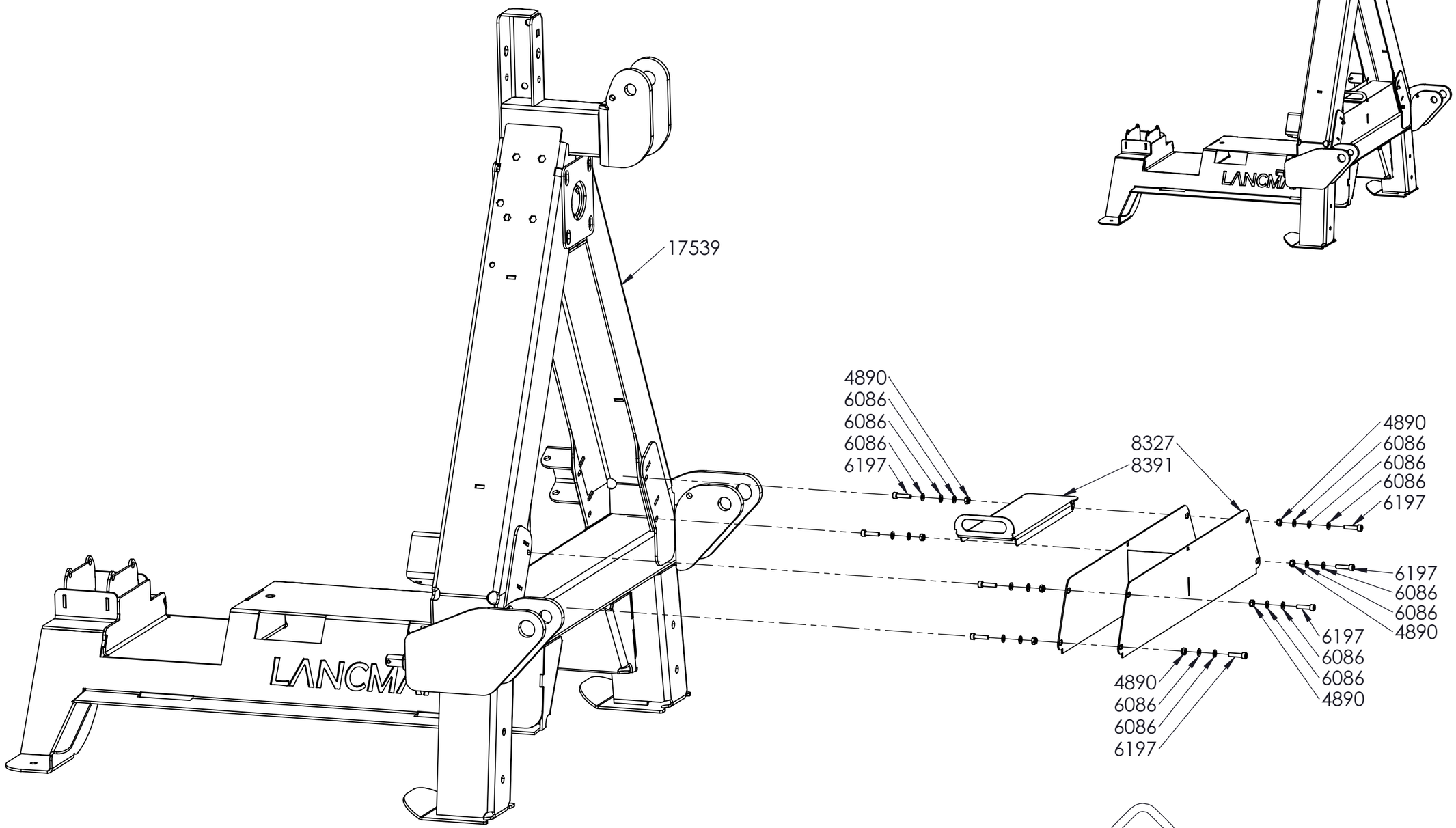

LANCMAN 2501 VF SH
LANCMAN 2501 HVF SH

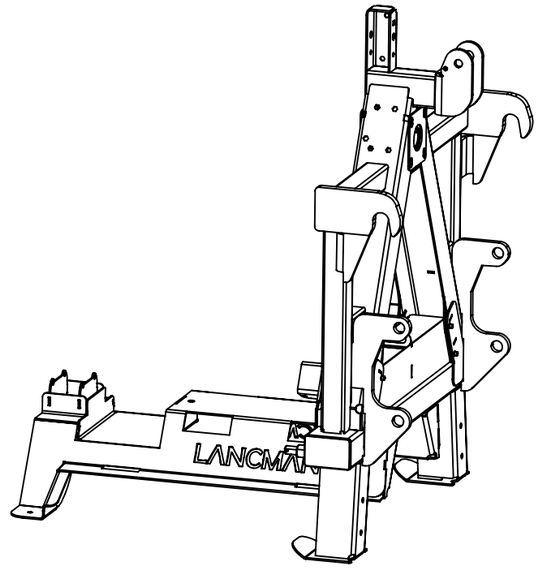

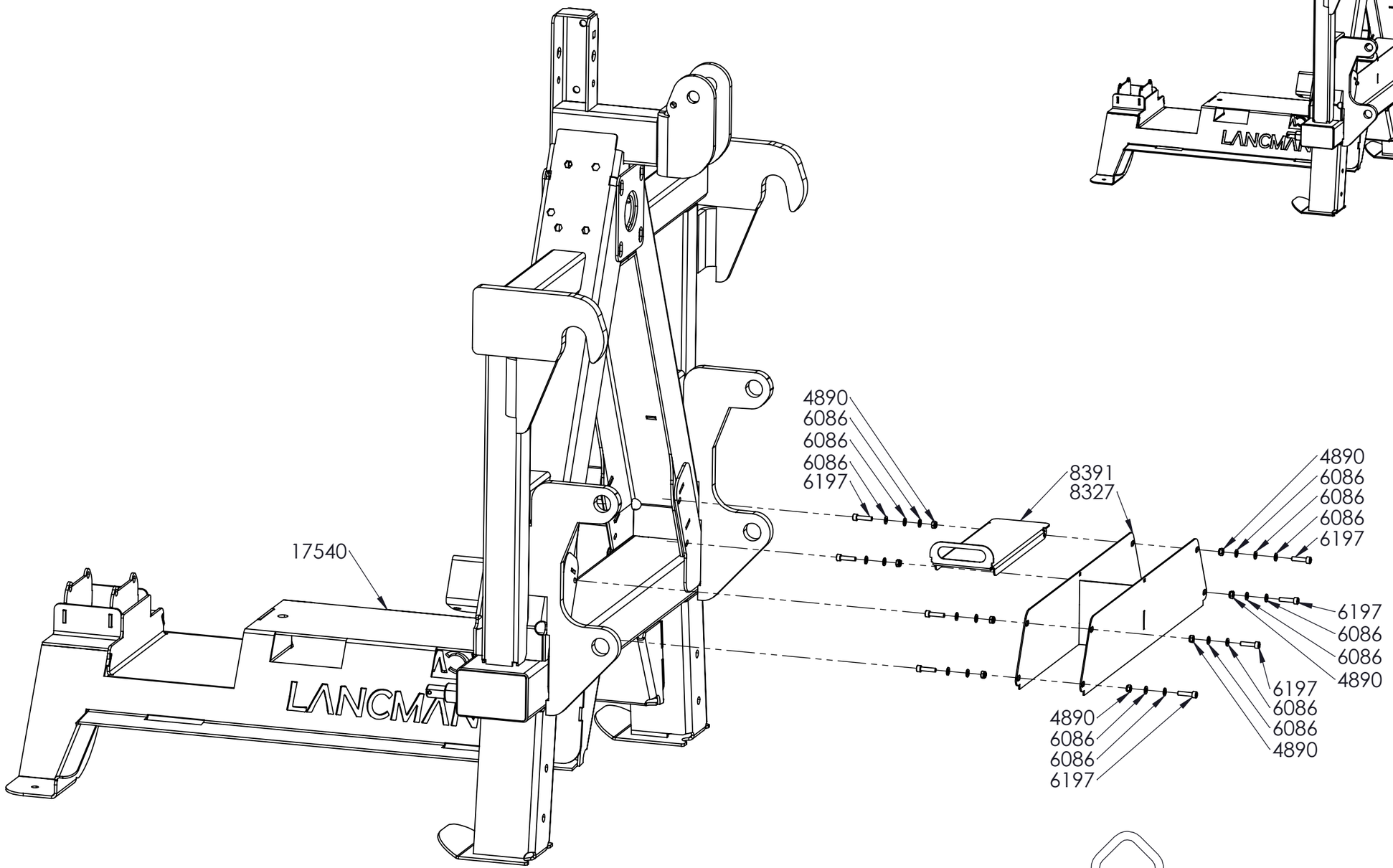

LANCMAN® by GOMARK

LANCMAN 2501 SH

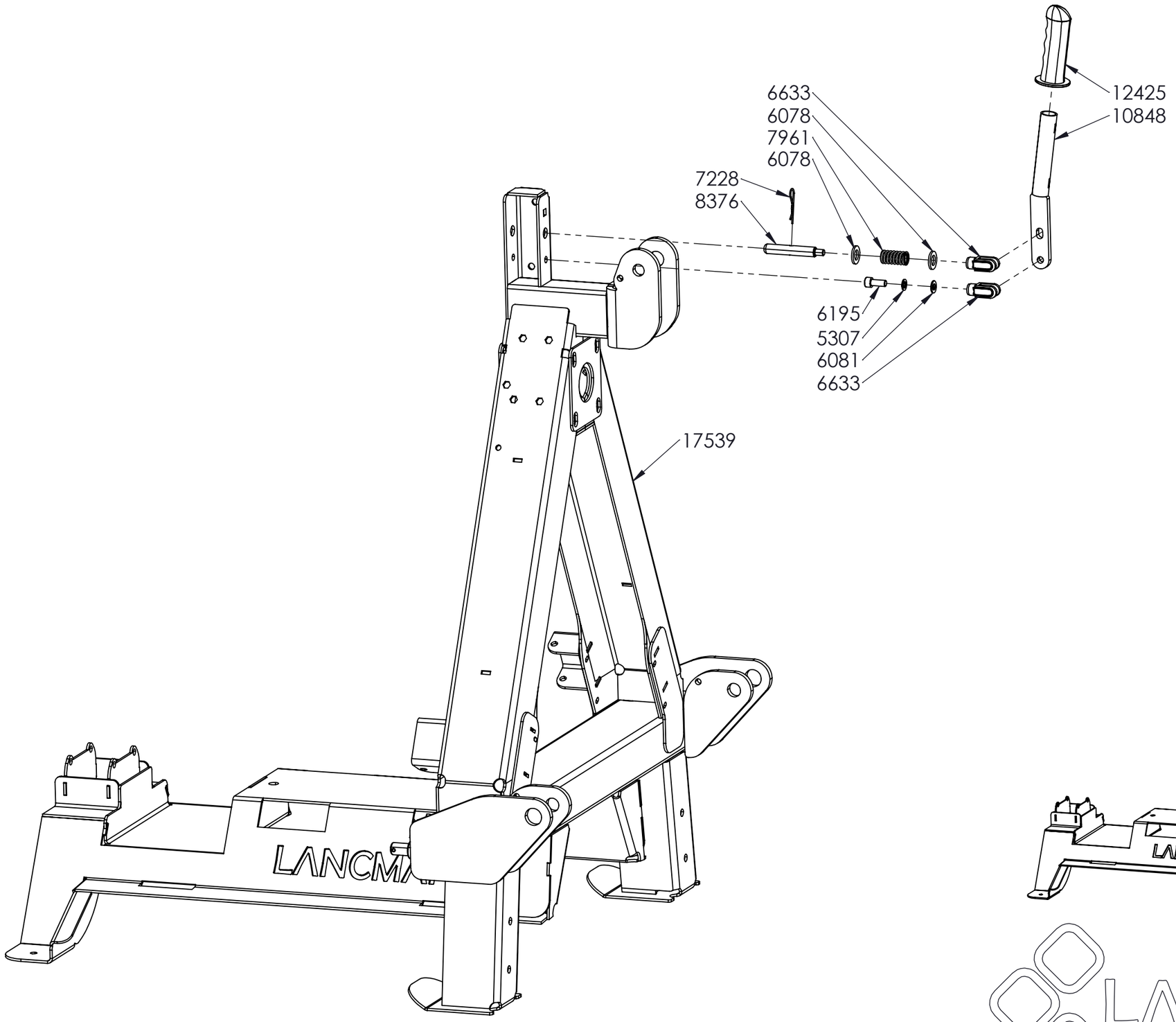

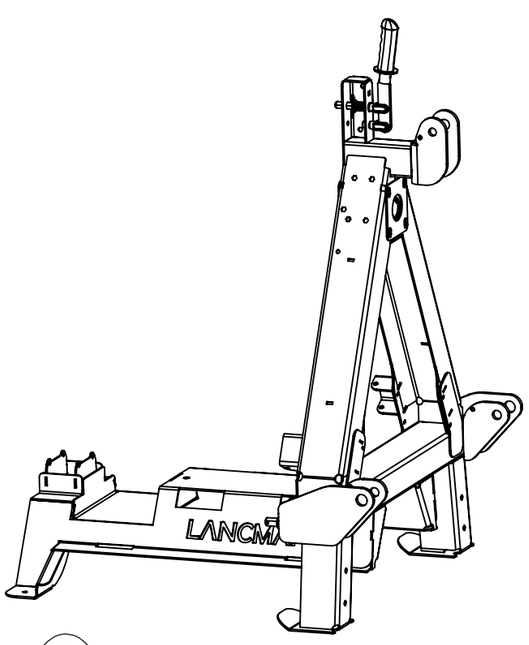

LANCMAN® by GOMARK

LANCMAN 2501 VF SH

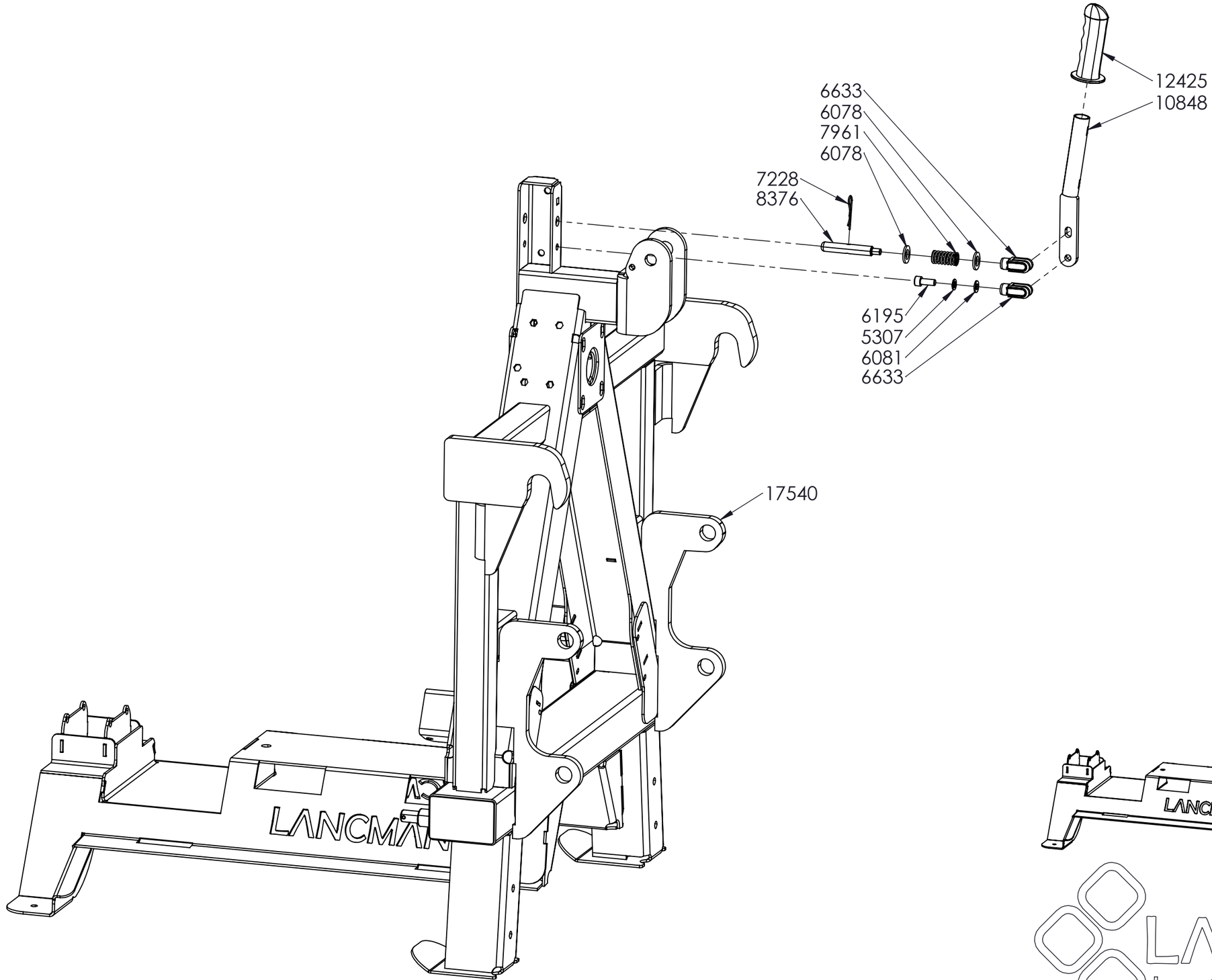

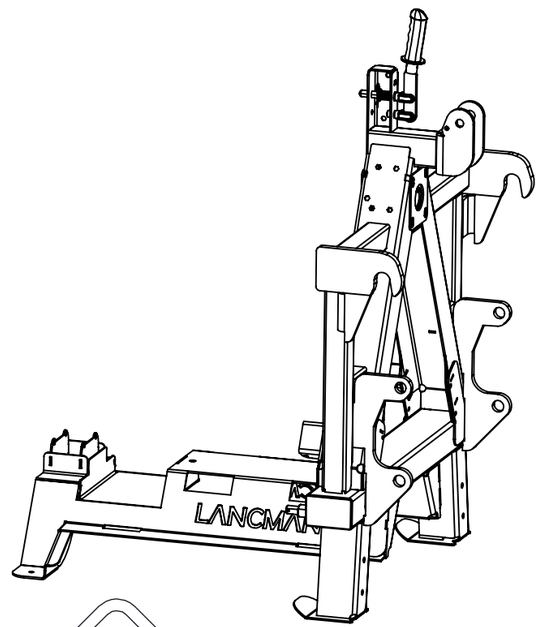

LANCMAN® by GOMARK

LANCMAN 2501 SH

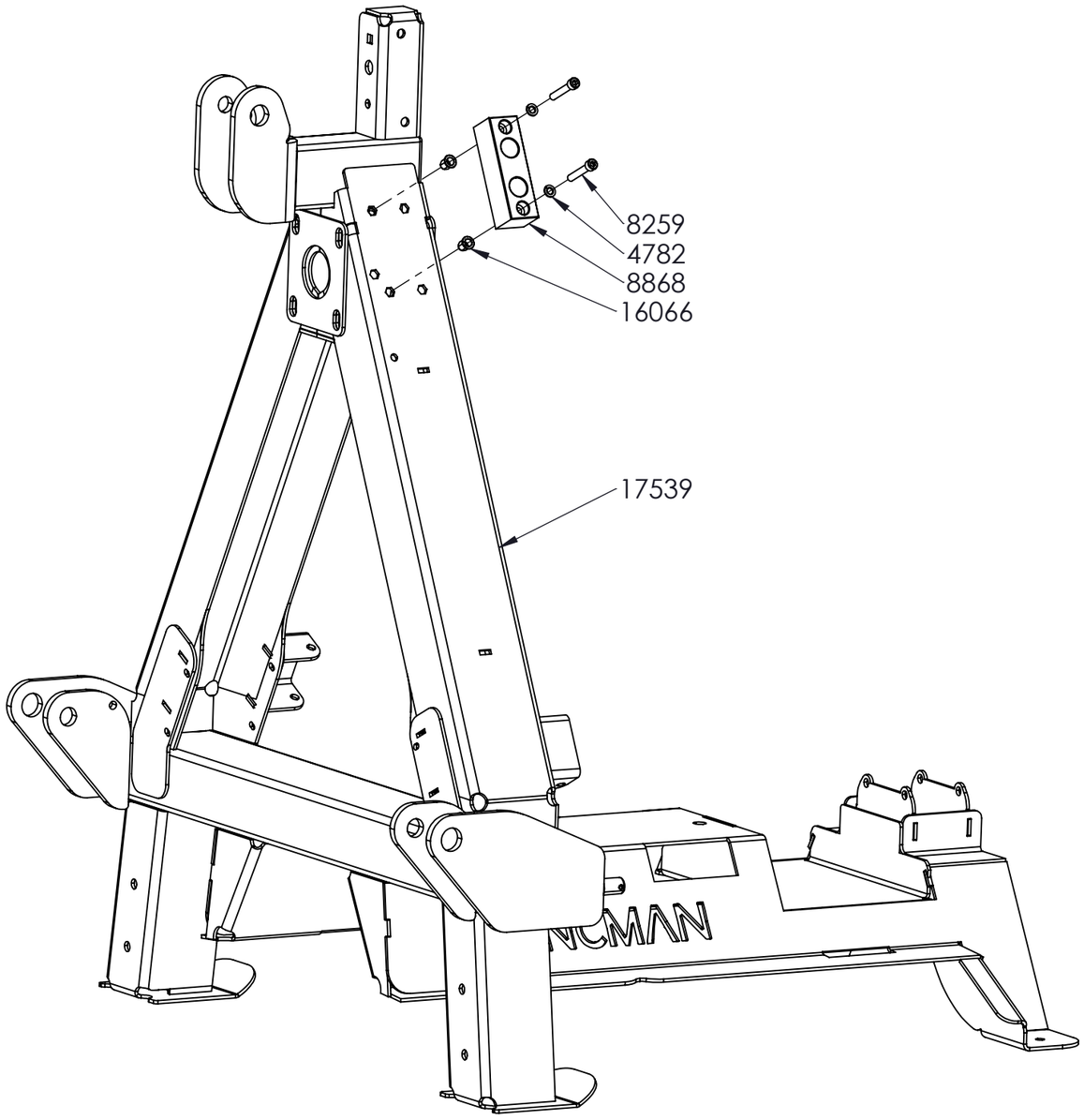

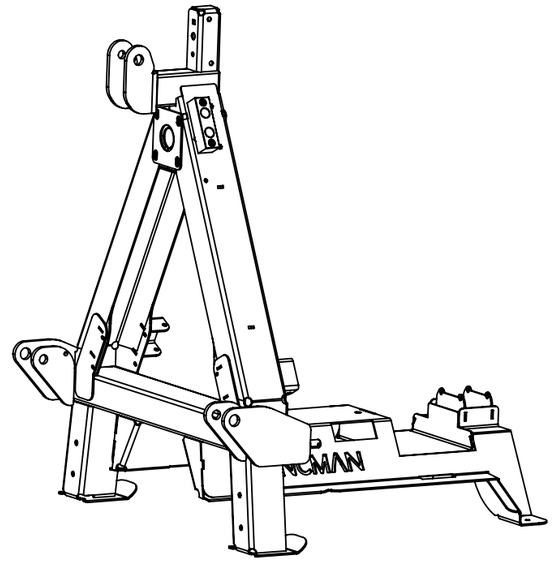

LANCMAN 2501 VF SH

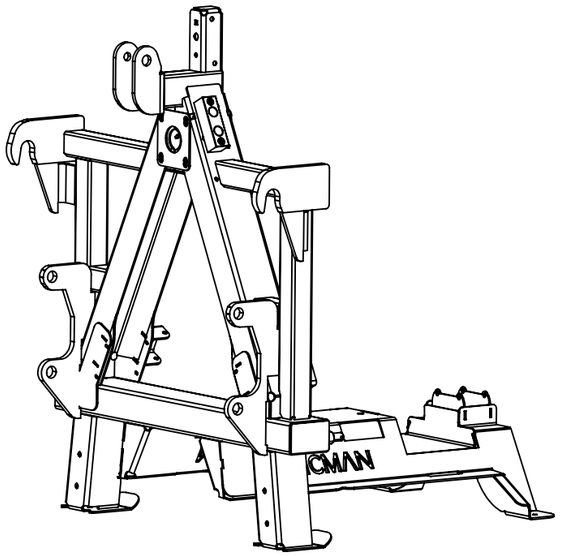

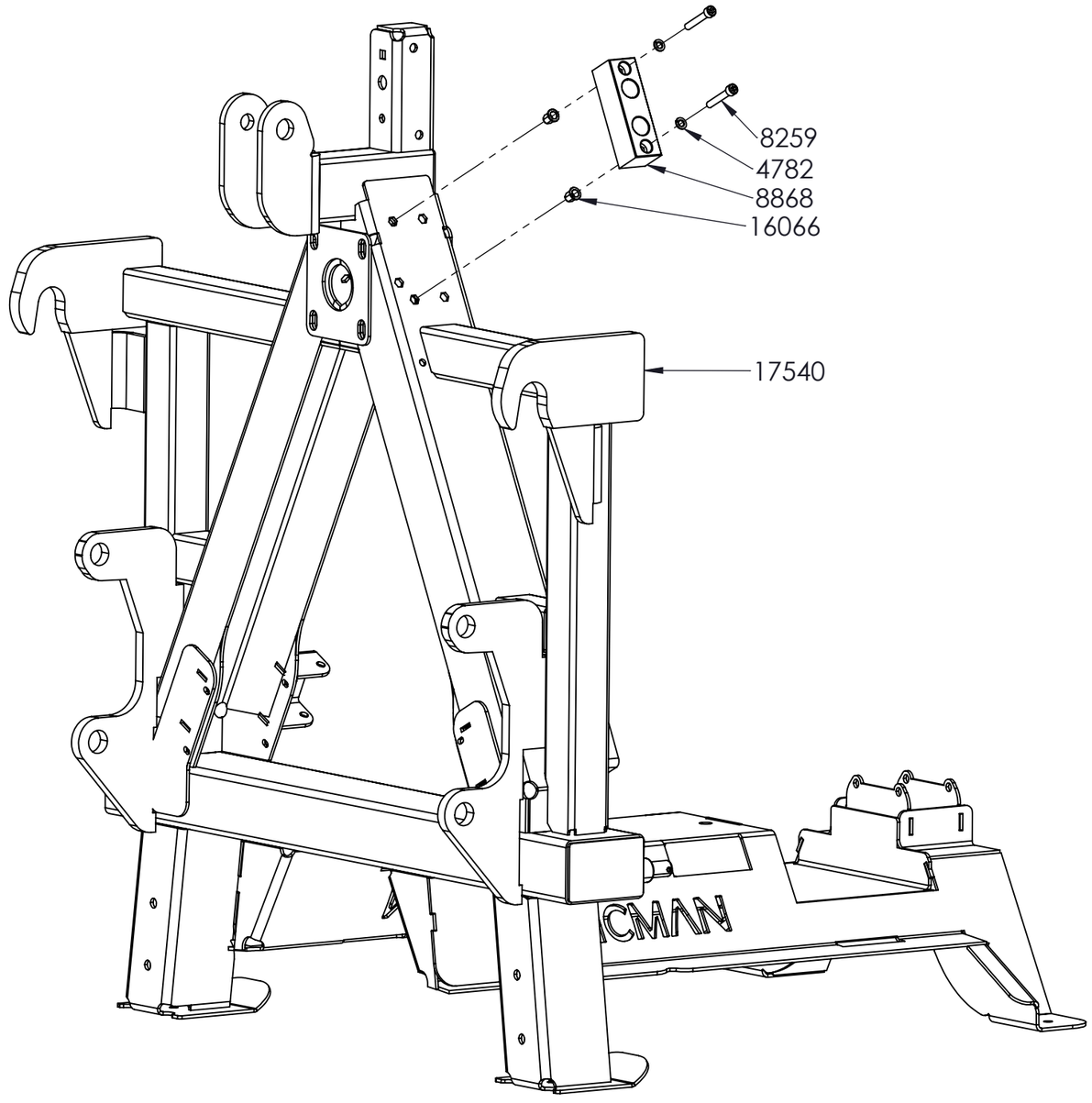

LANCMAN® by GOMARK

LANCMAN 2501 H SH

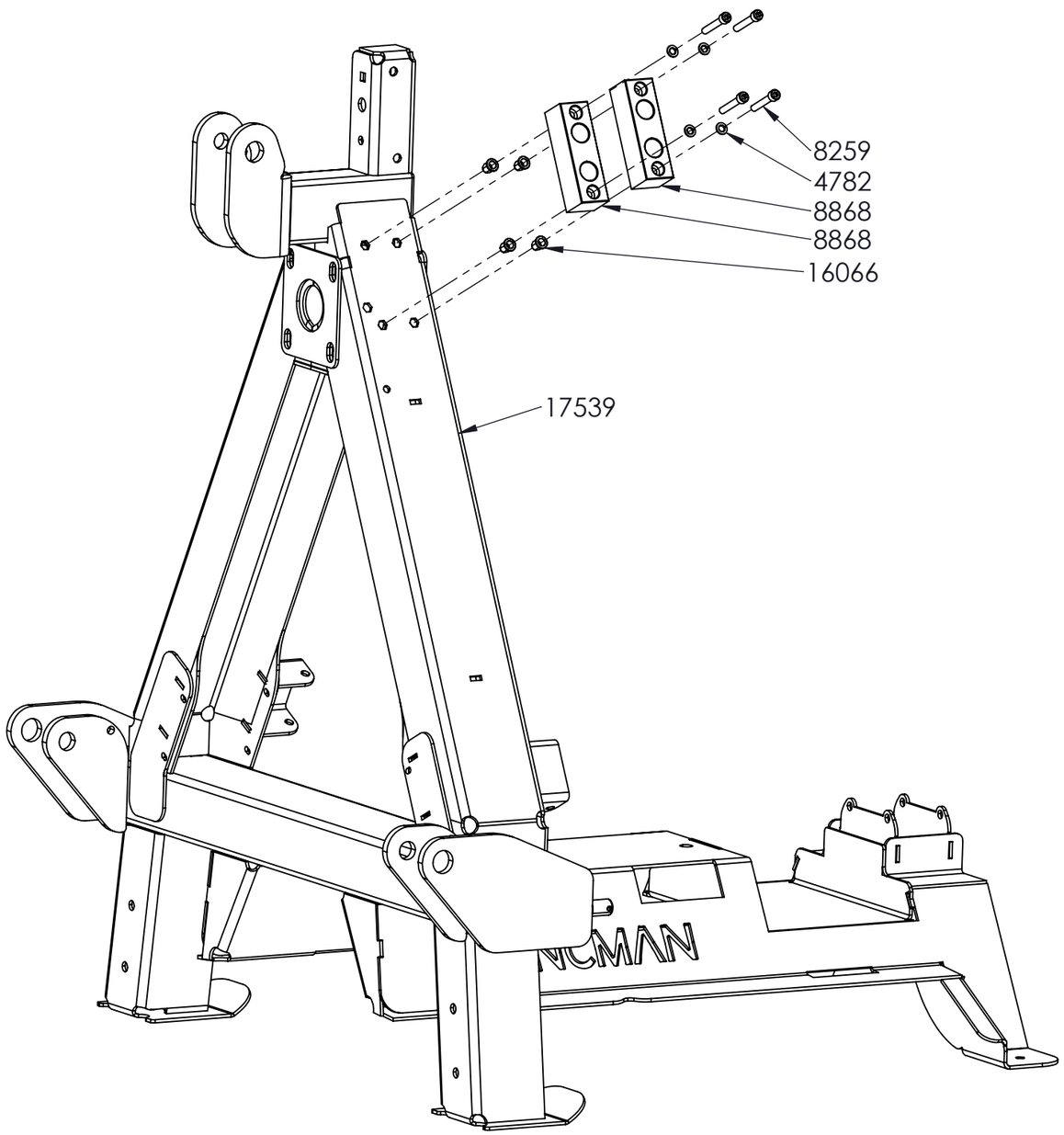

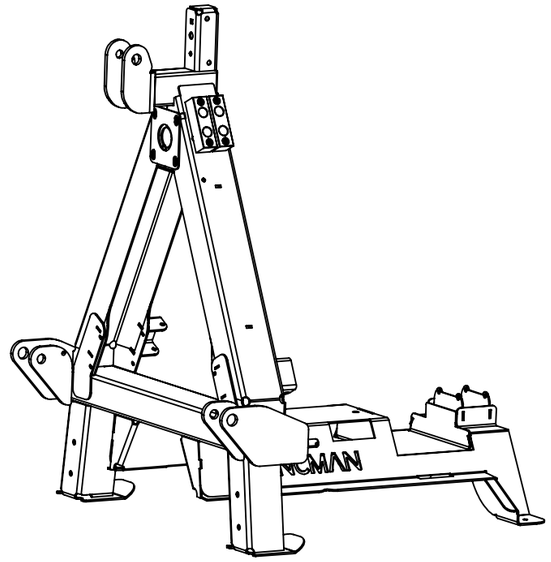

LANCMAN® by GOMARK

LANCMAN 2501 HVF SH

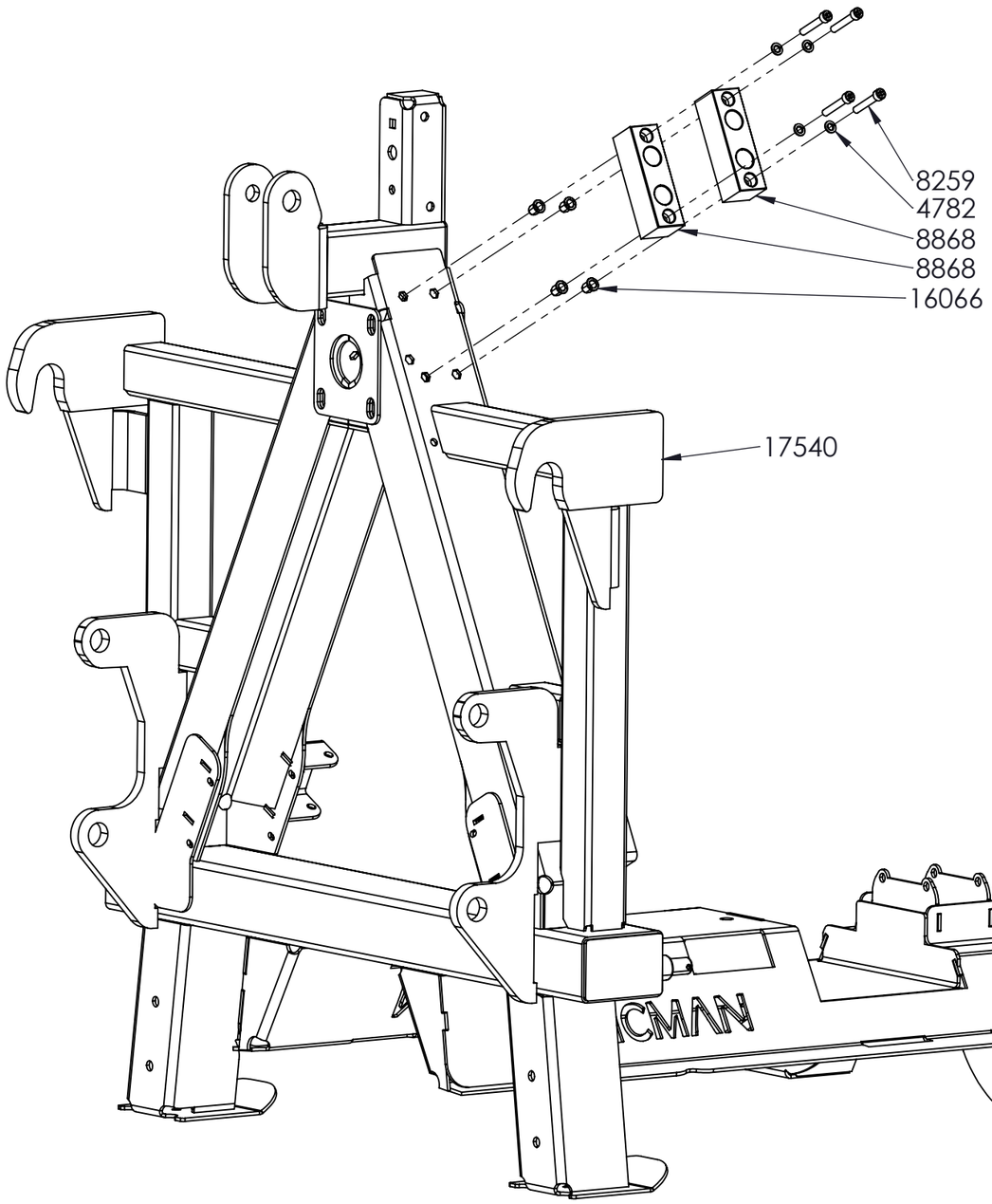

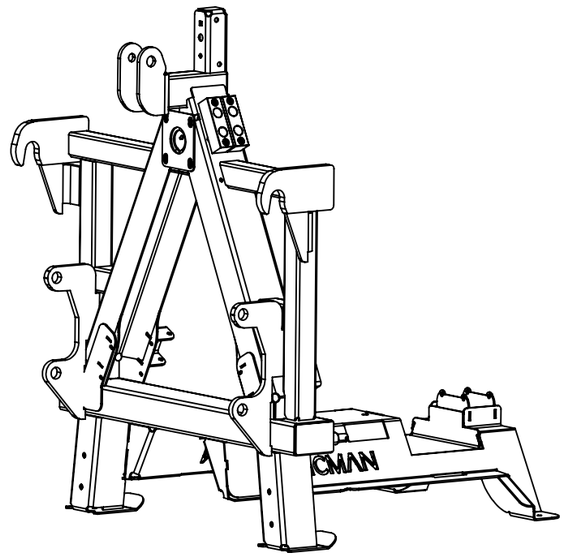

LANCMAN® by GOMARK

LANCMAN 2501 SH
LANCMAN 2501 H SH

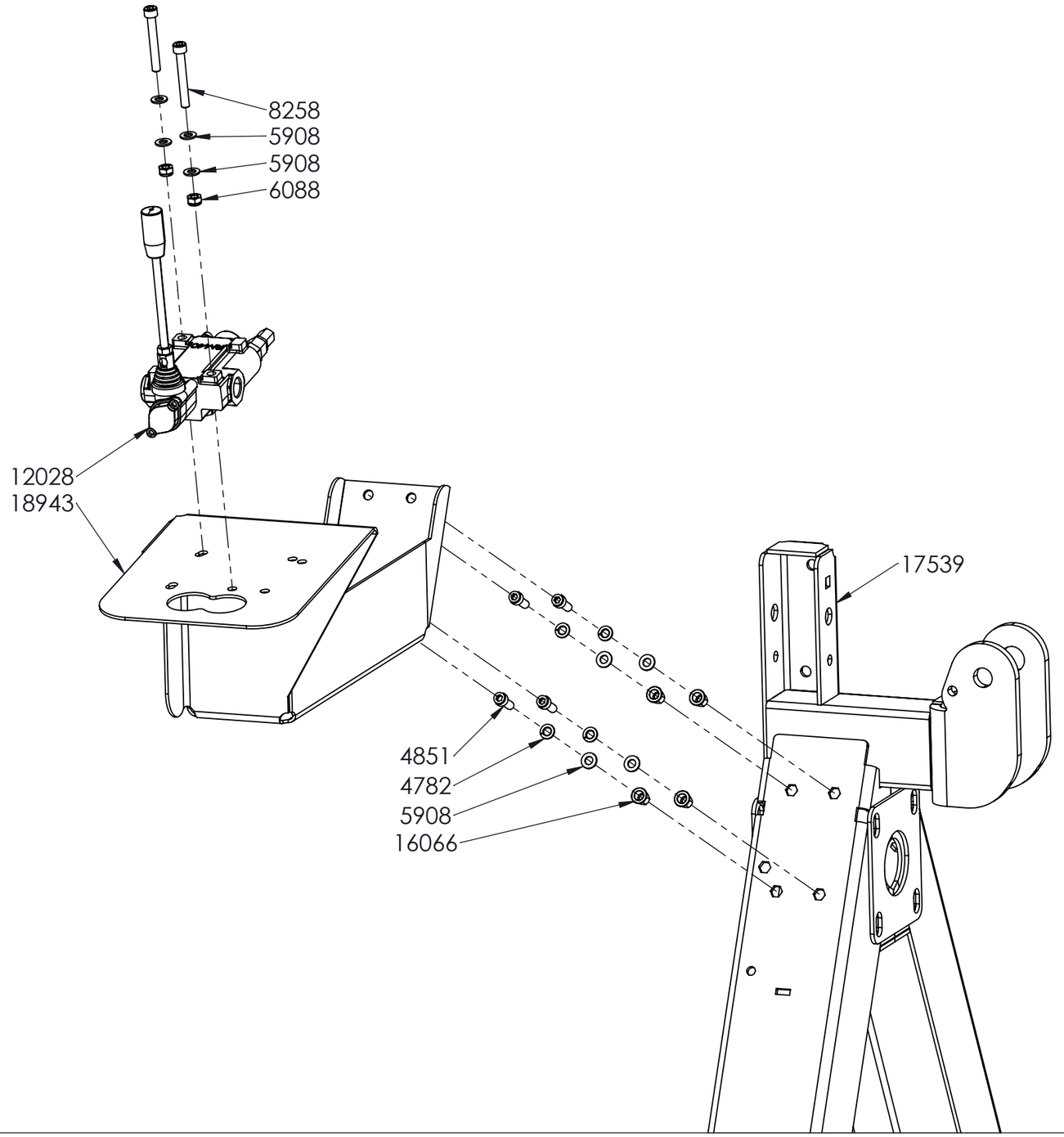

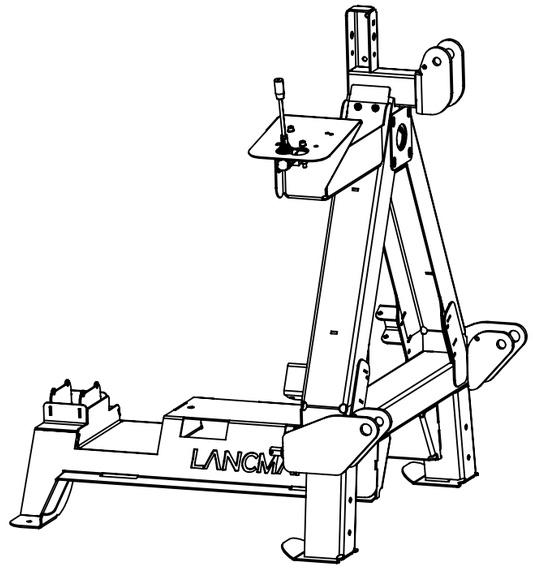

LANCMAN® by GOMARK

LANCMAN 2501 VF SH
LANCMAN 2501 HVF SH

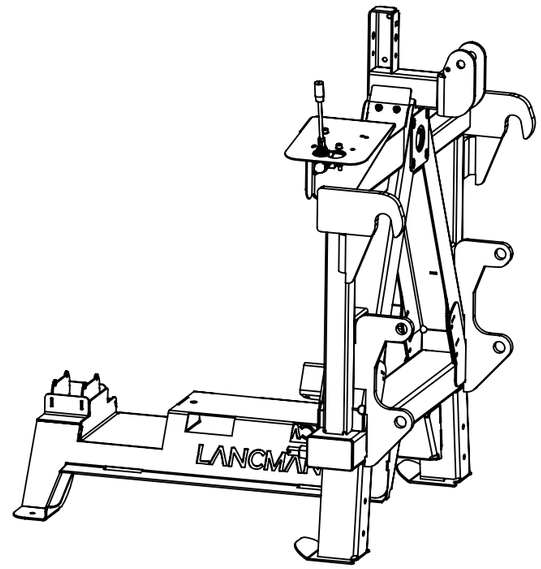

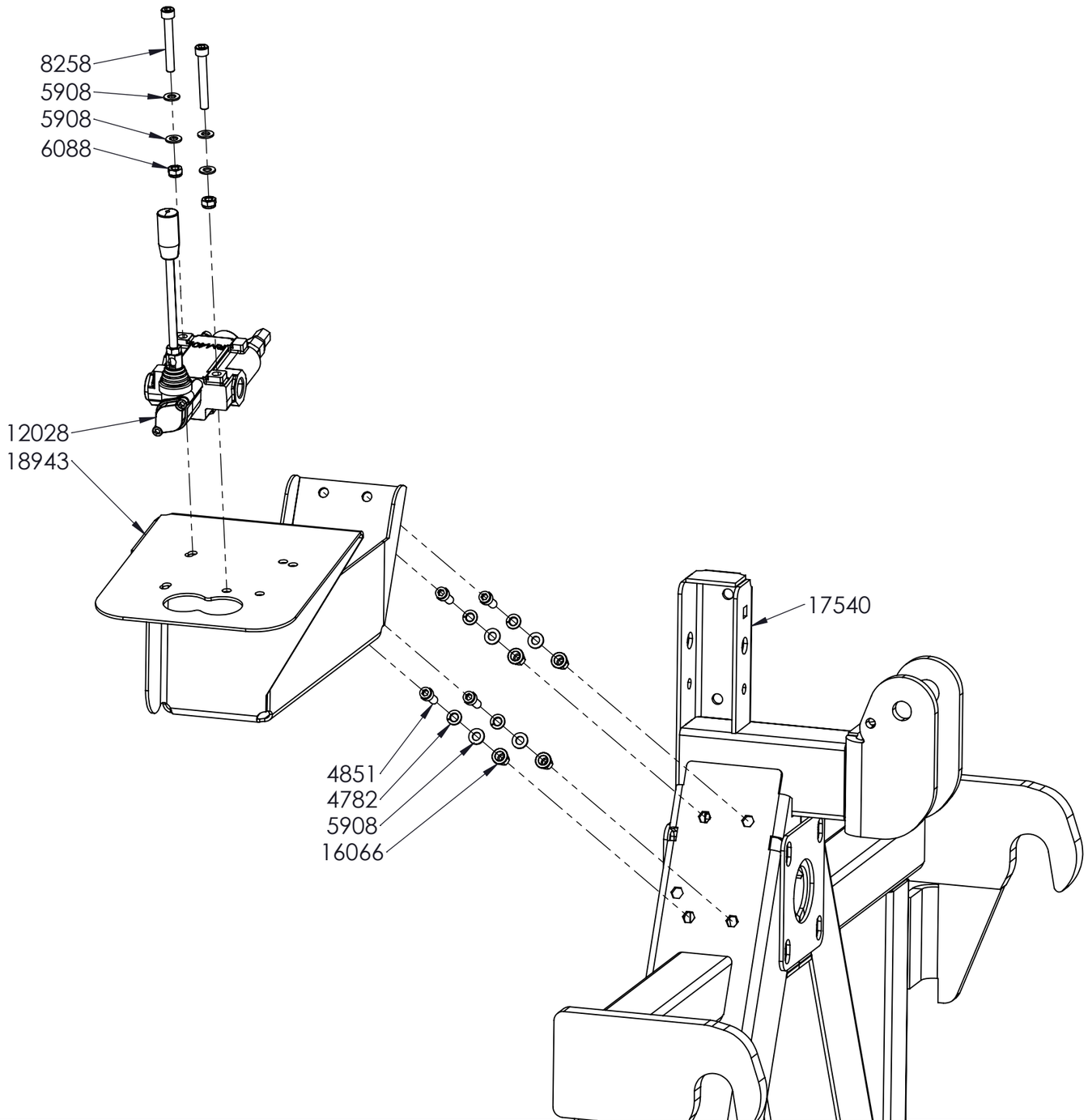

LANCMAN® by GOMARK

LANCMAN 2501 SH
LANCMAN 2501 H SH

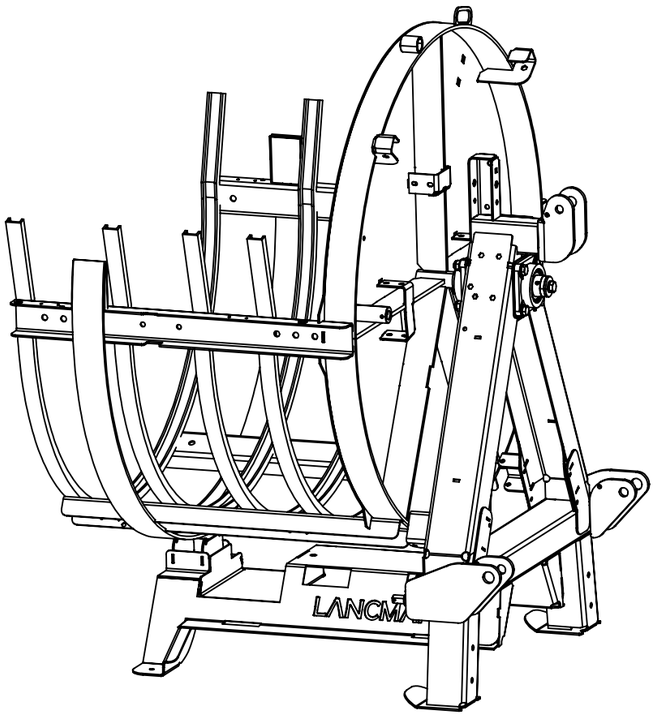

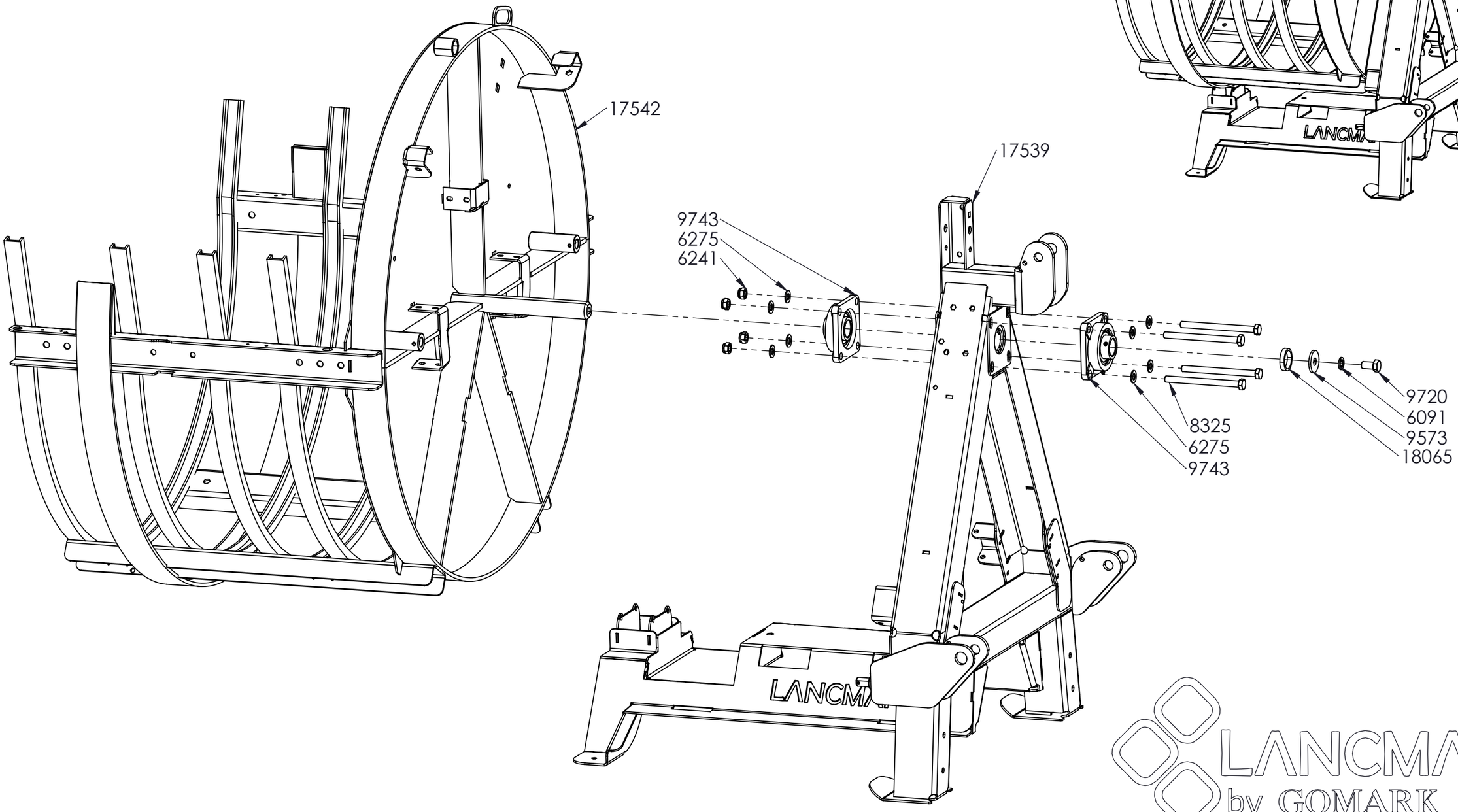

LANCMAN® by GOMARK

LANCMAN 2501 VF SH
LANCMAN 2501 HVF SH

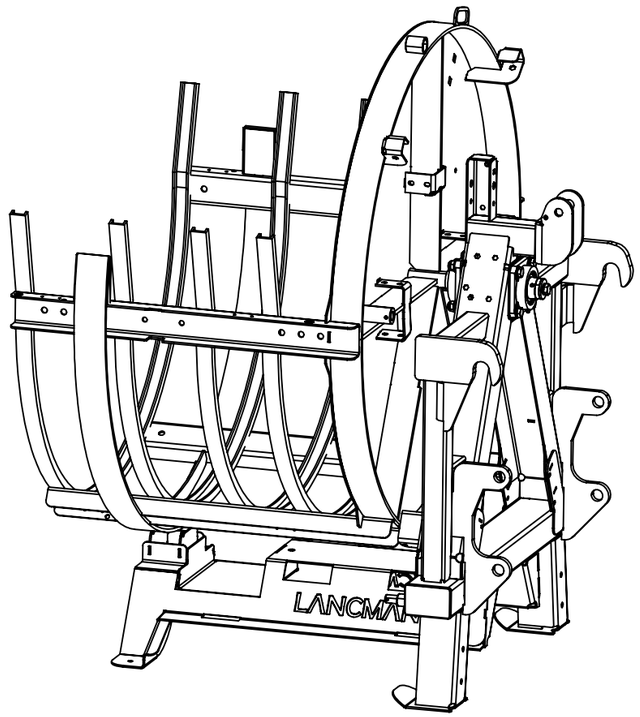

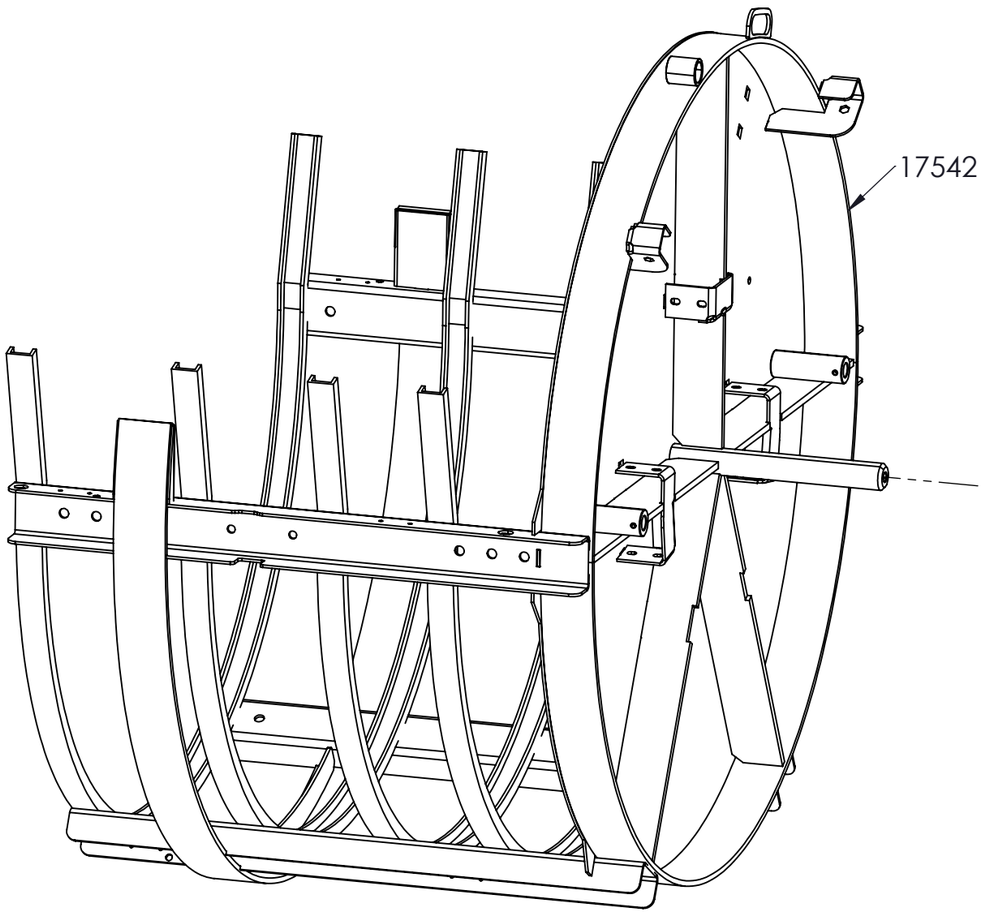

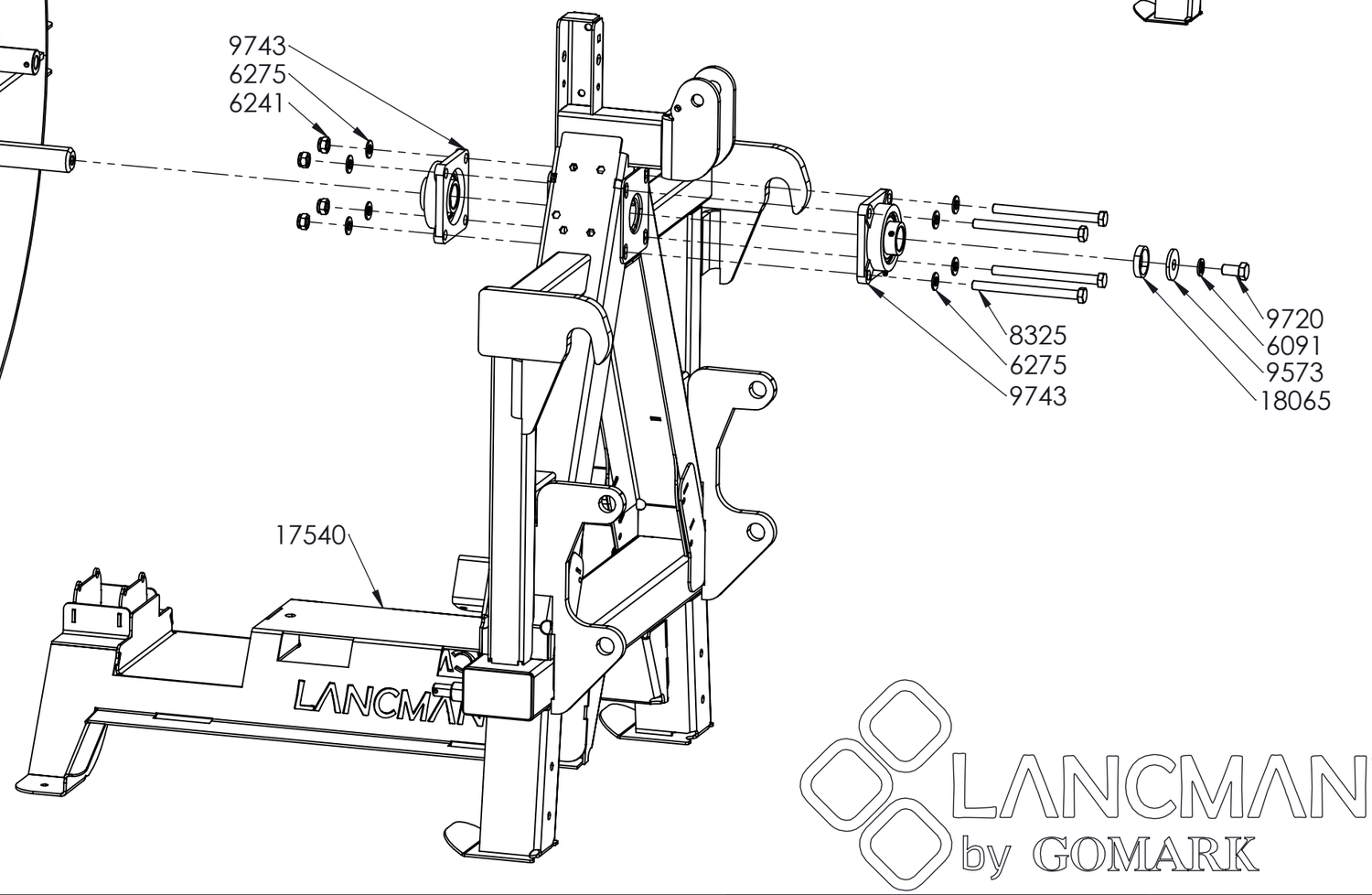

LANCMAN® by GOMARK

LANCMAN 2501 SH
LANCMAN 2501 VF SH

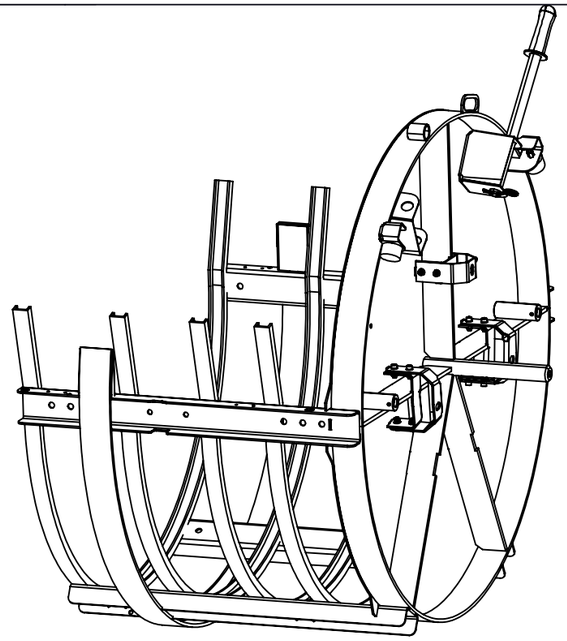

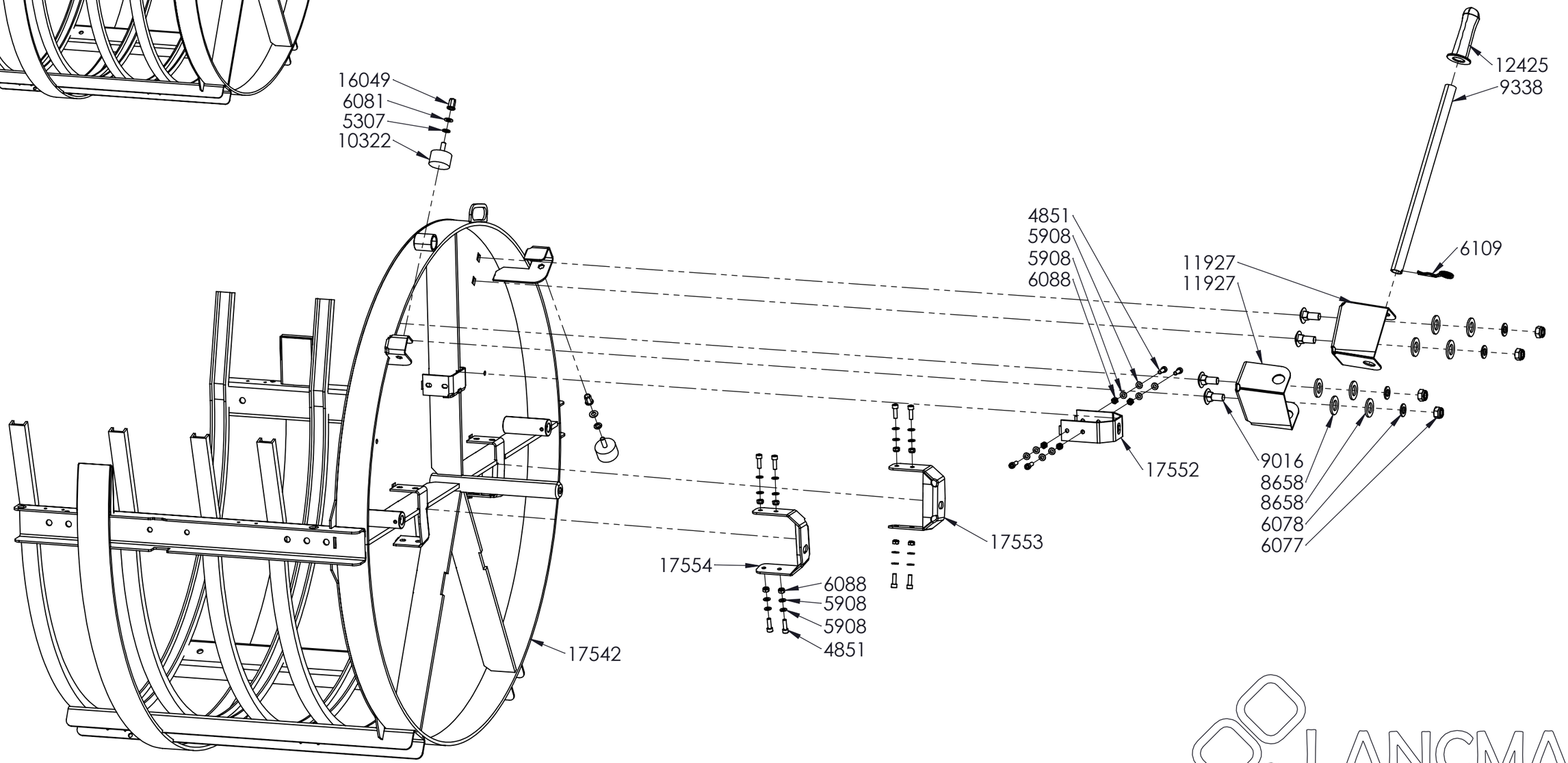

LANCMAN® by GOMARK

LANCMAN 2501 H SH
LANCMAN 2501 HVF SH

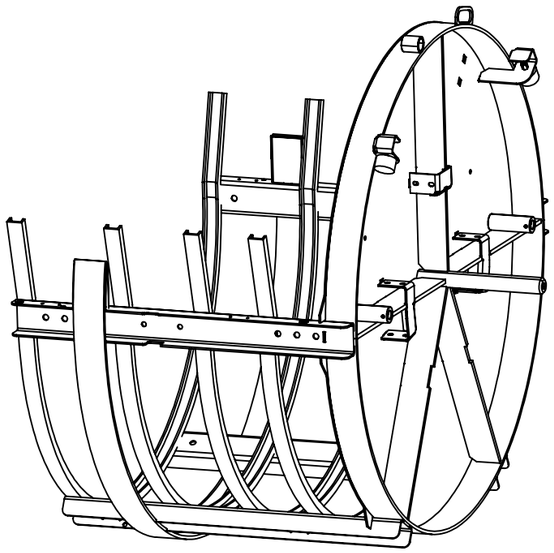

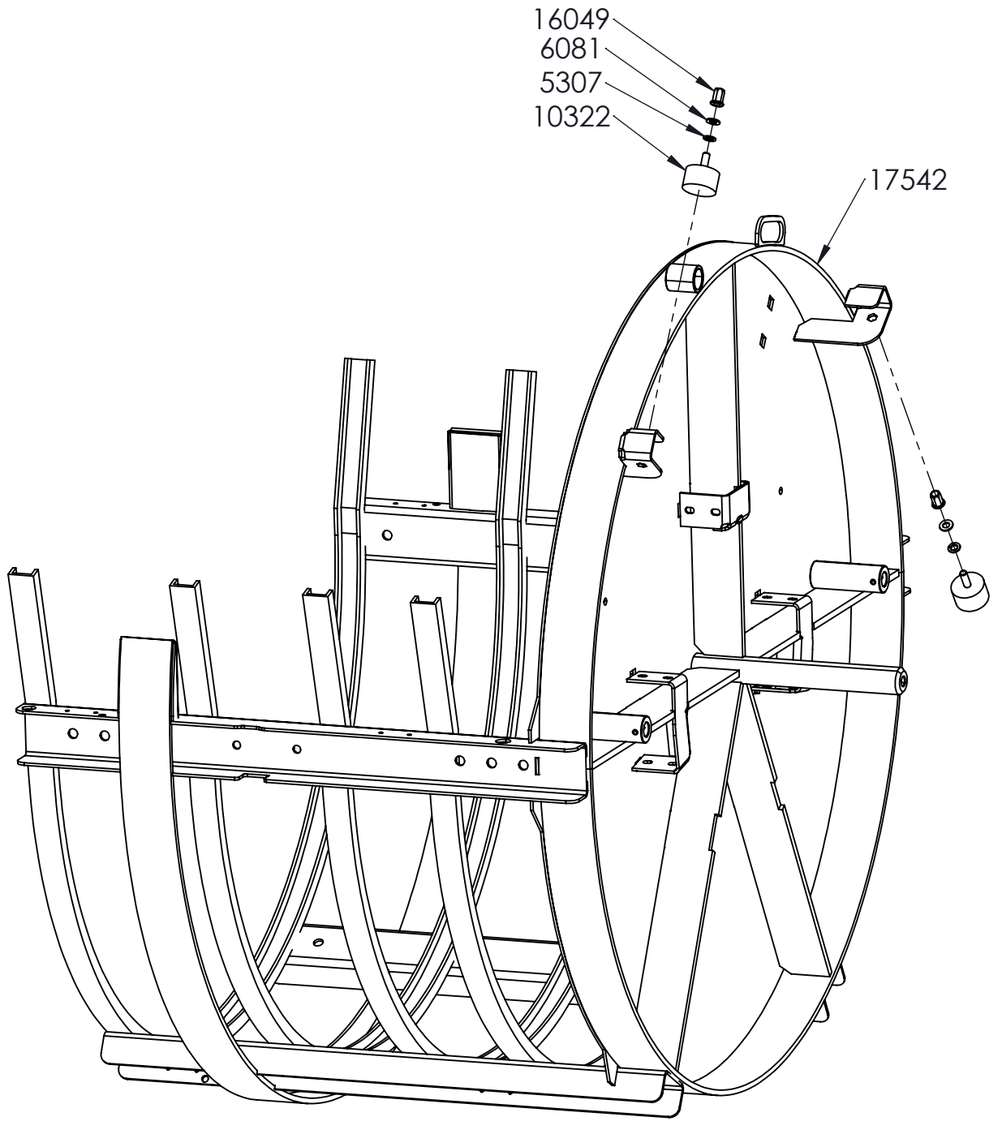

LANCMAN® by GOMARK

LANCMAN 2501 SH
LANCMAN 2501 H SH
LANCMAN 2501 VF SH
LANCMAN 2501 HVF SH

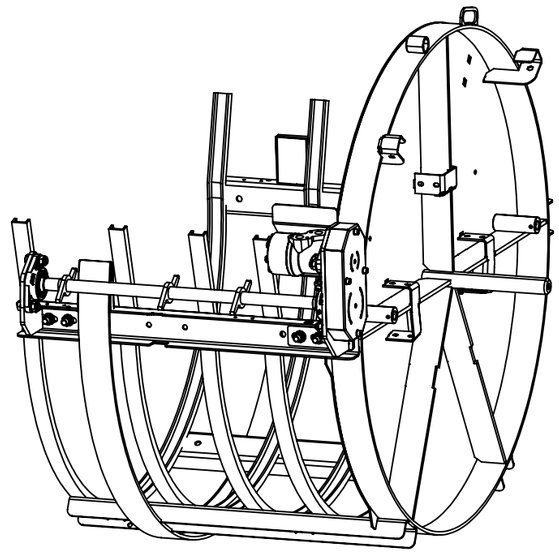

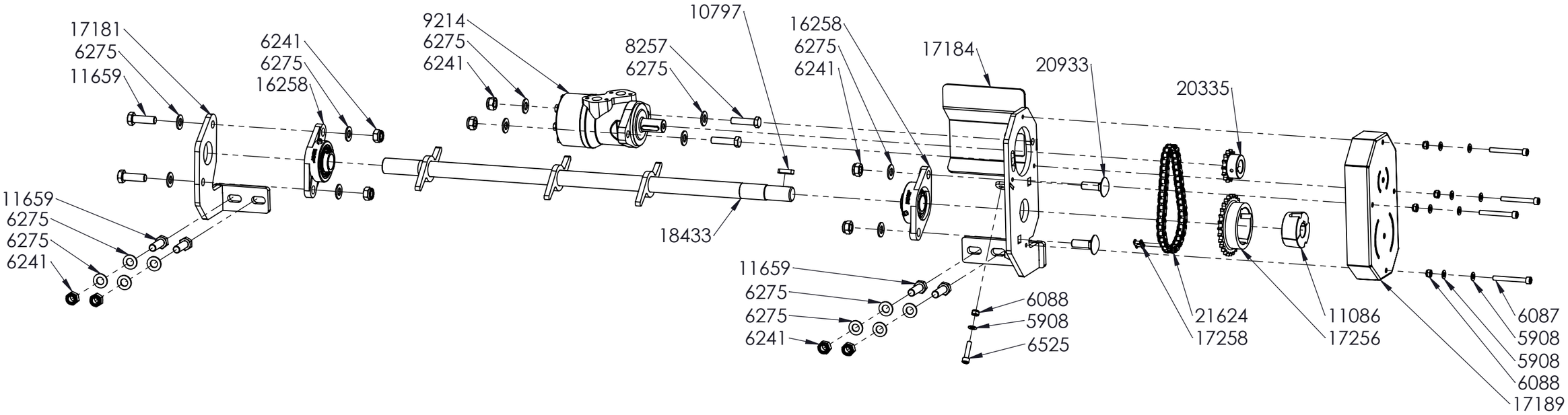

LANCMAN® by GOMARK

LANCMAN 2501 H SH

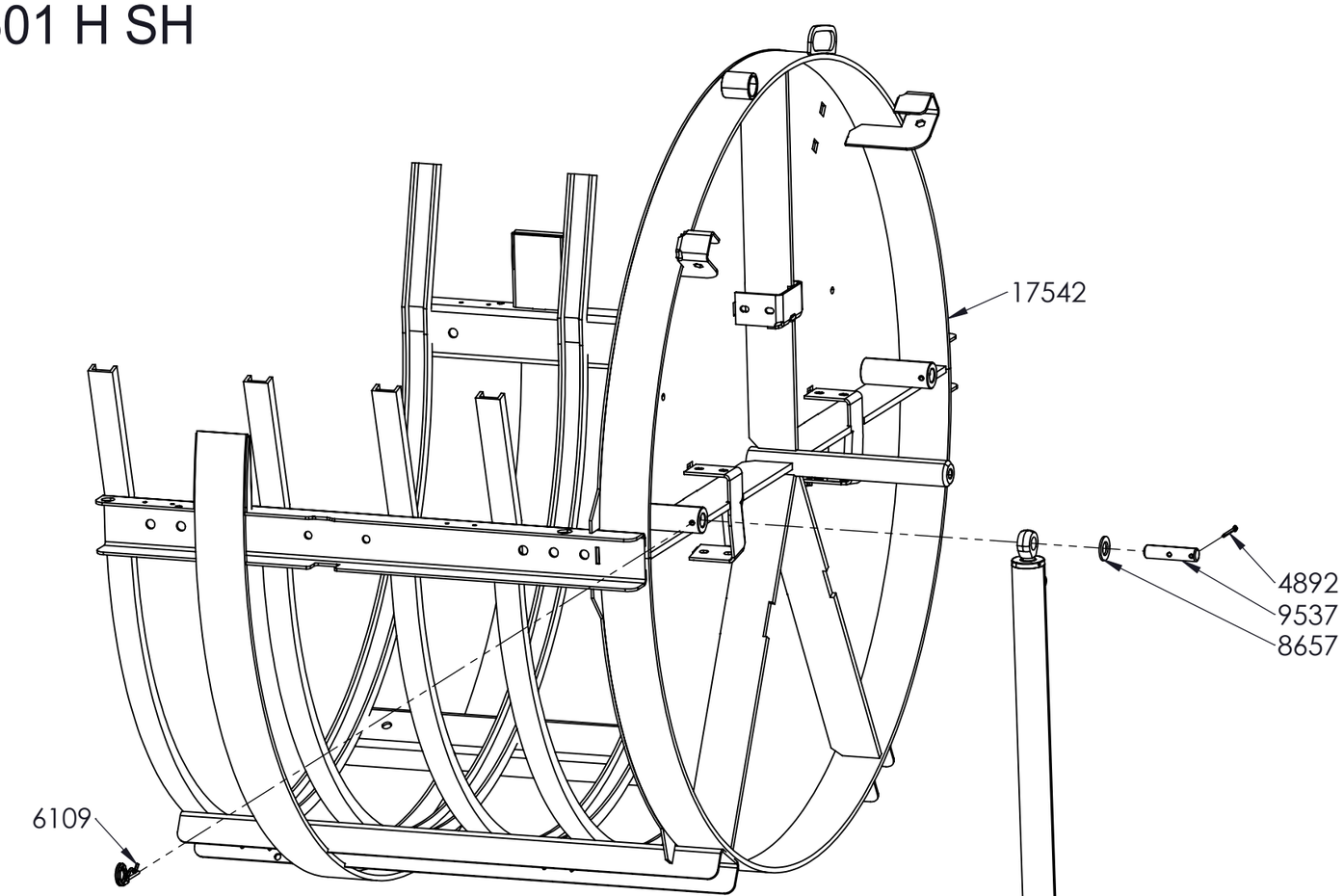

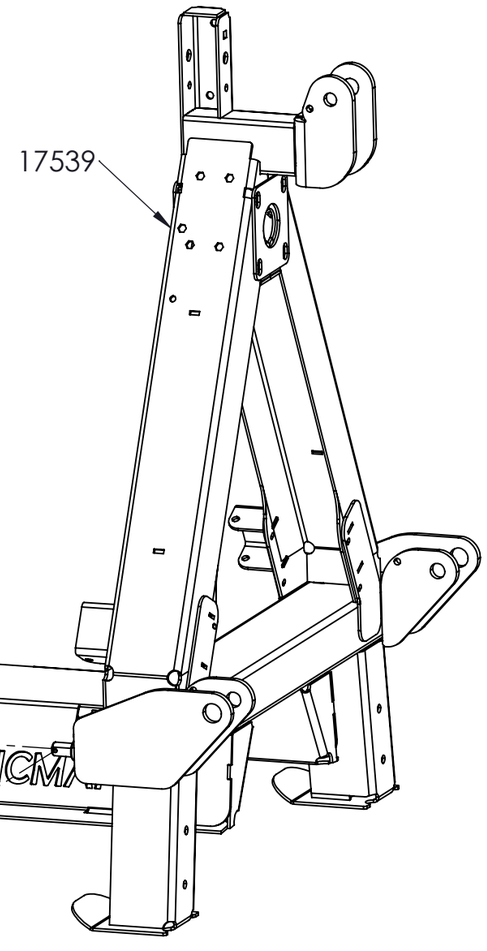

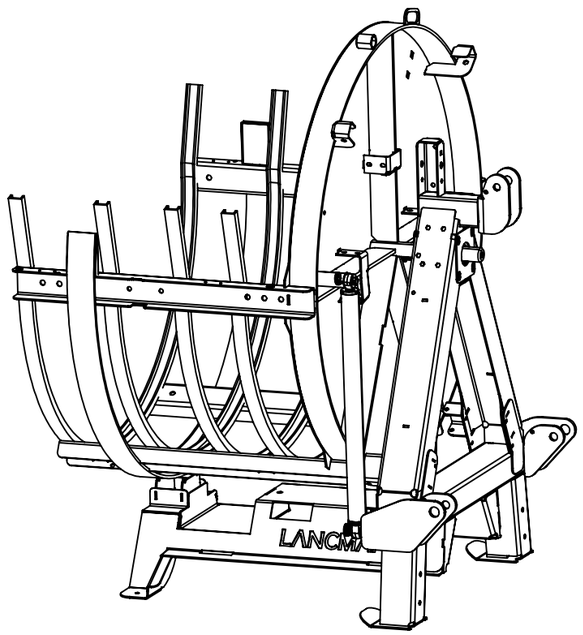

LANCMAN® by GOMARK

LANCMAN 2501 HVF SH

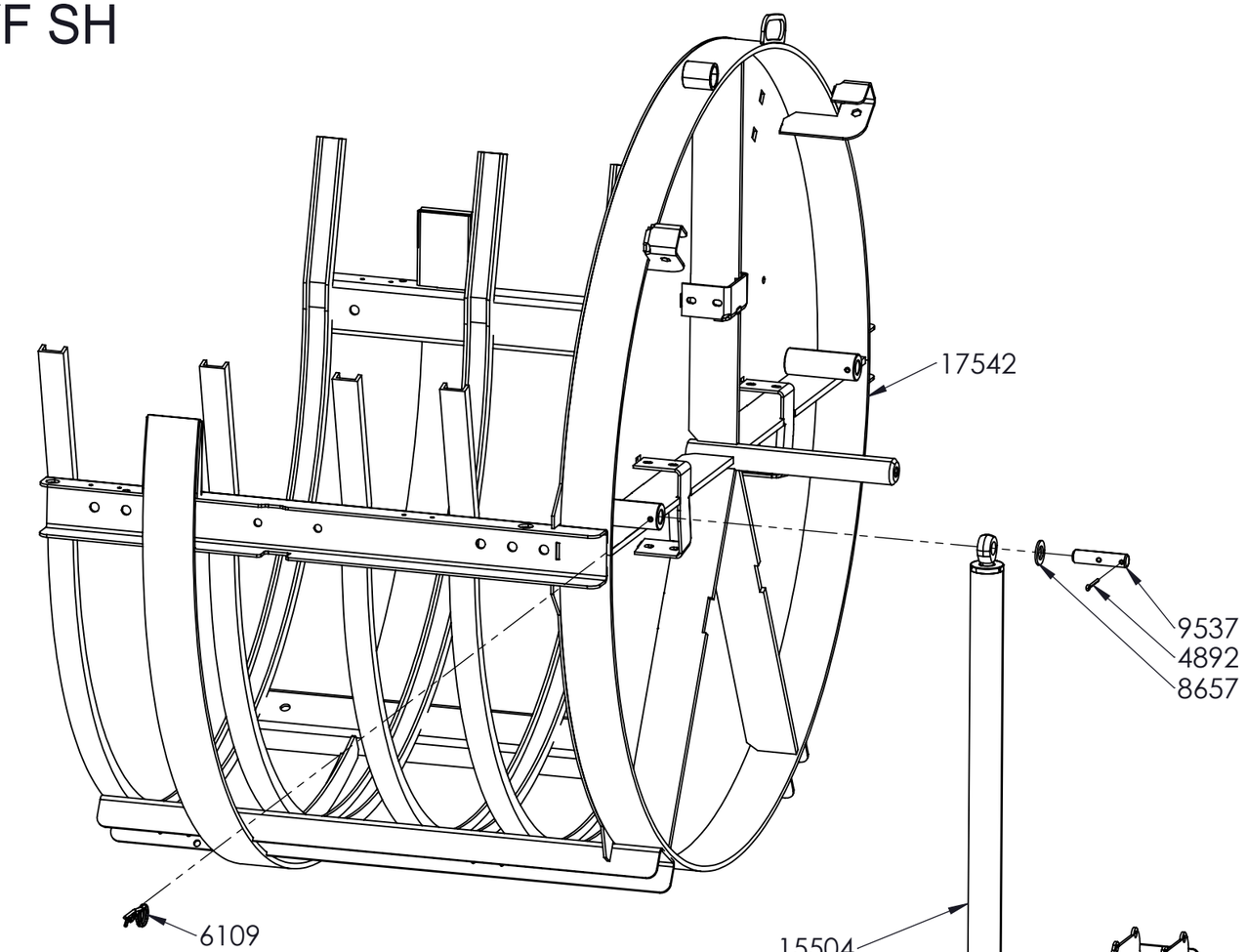

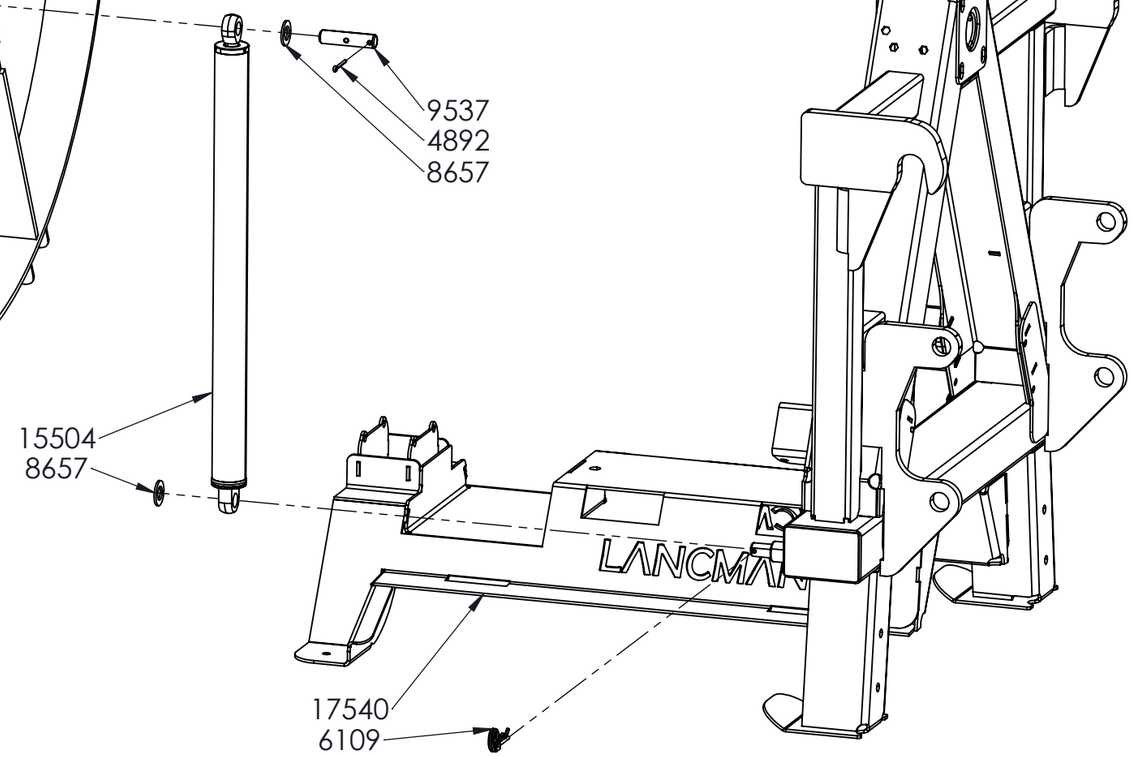

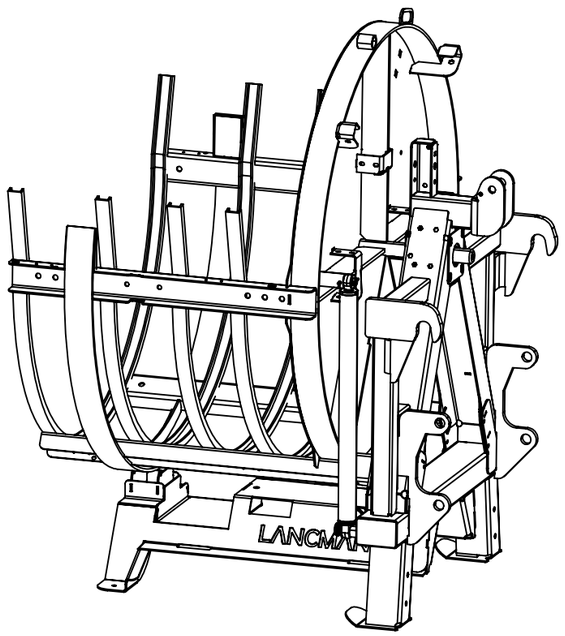

LANCMAN® by GOMARK

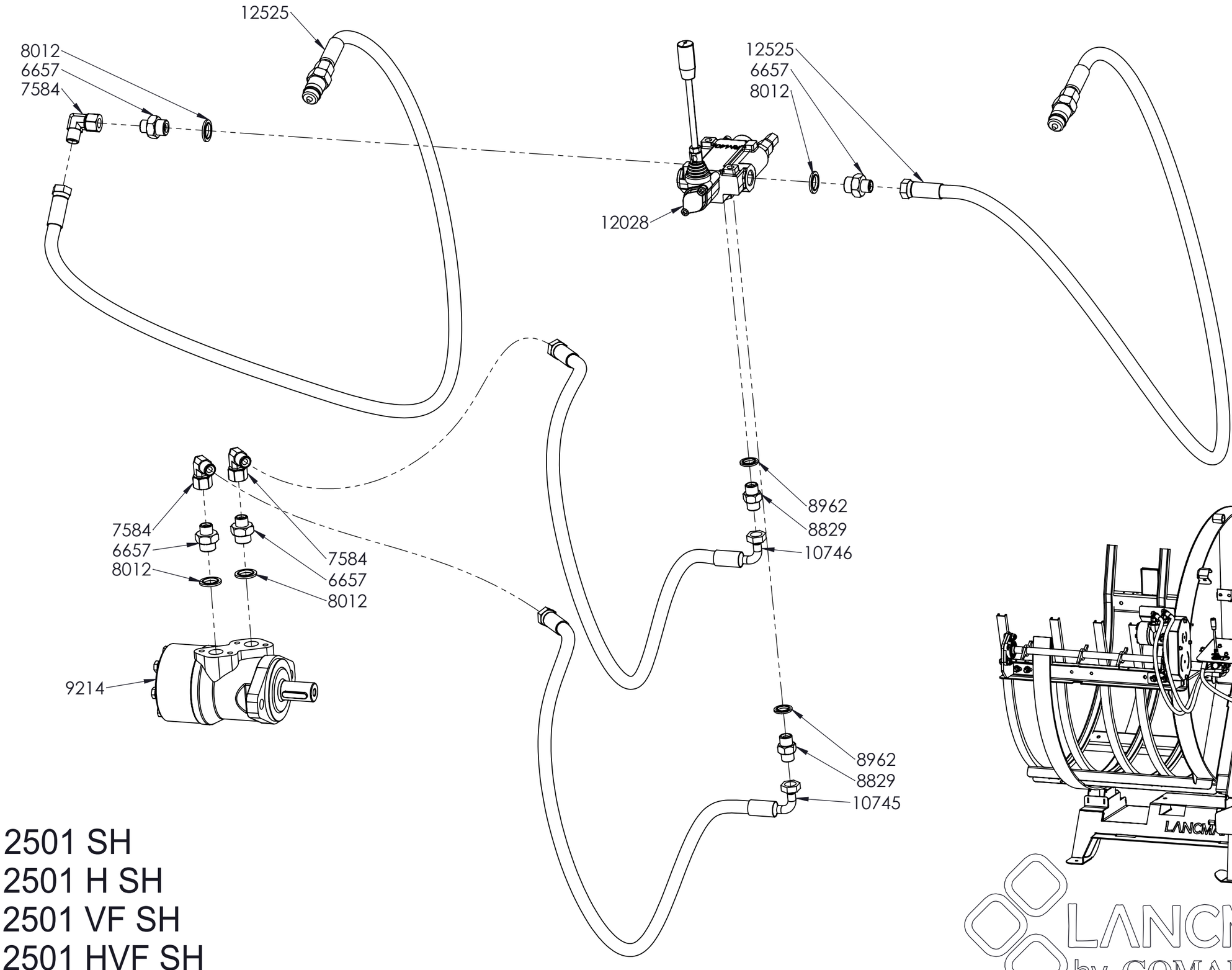

LANCMAN 2501 SH
LANCMAN 2501 H SH
LANCMAN 2501 VF SH
LANCMAN 2501 HVF SH

LANCMAN® by GOMARK

LANCMAN 2501 H SH
LANCMAN 2501 HVF SH

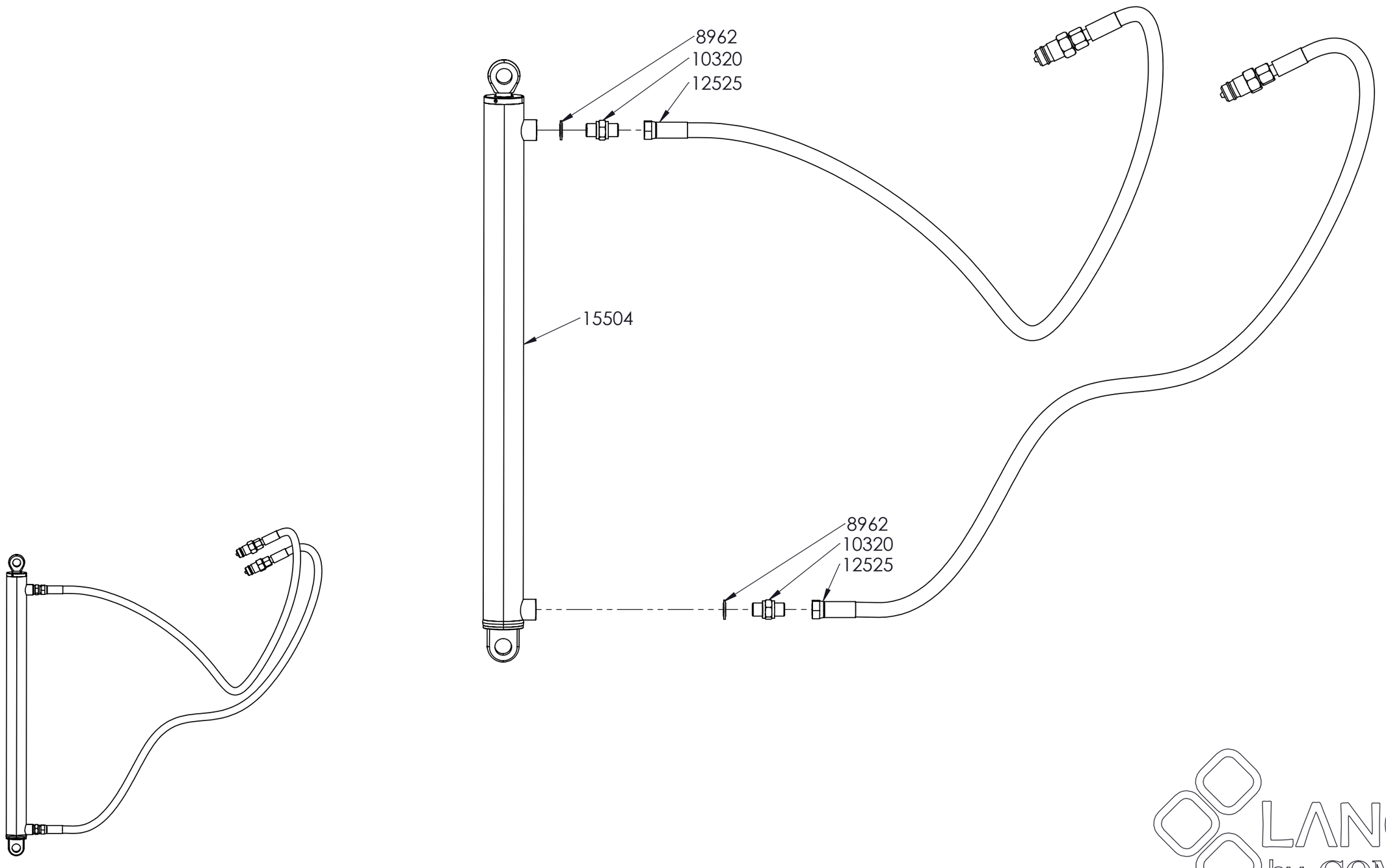

LANCMAN® by GOMARK

LANCMAN 2501 SH
LANCMAN 2501 H SH

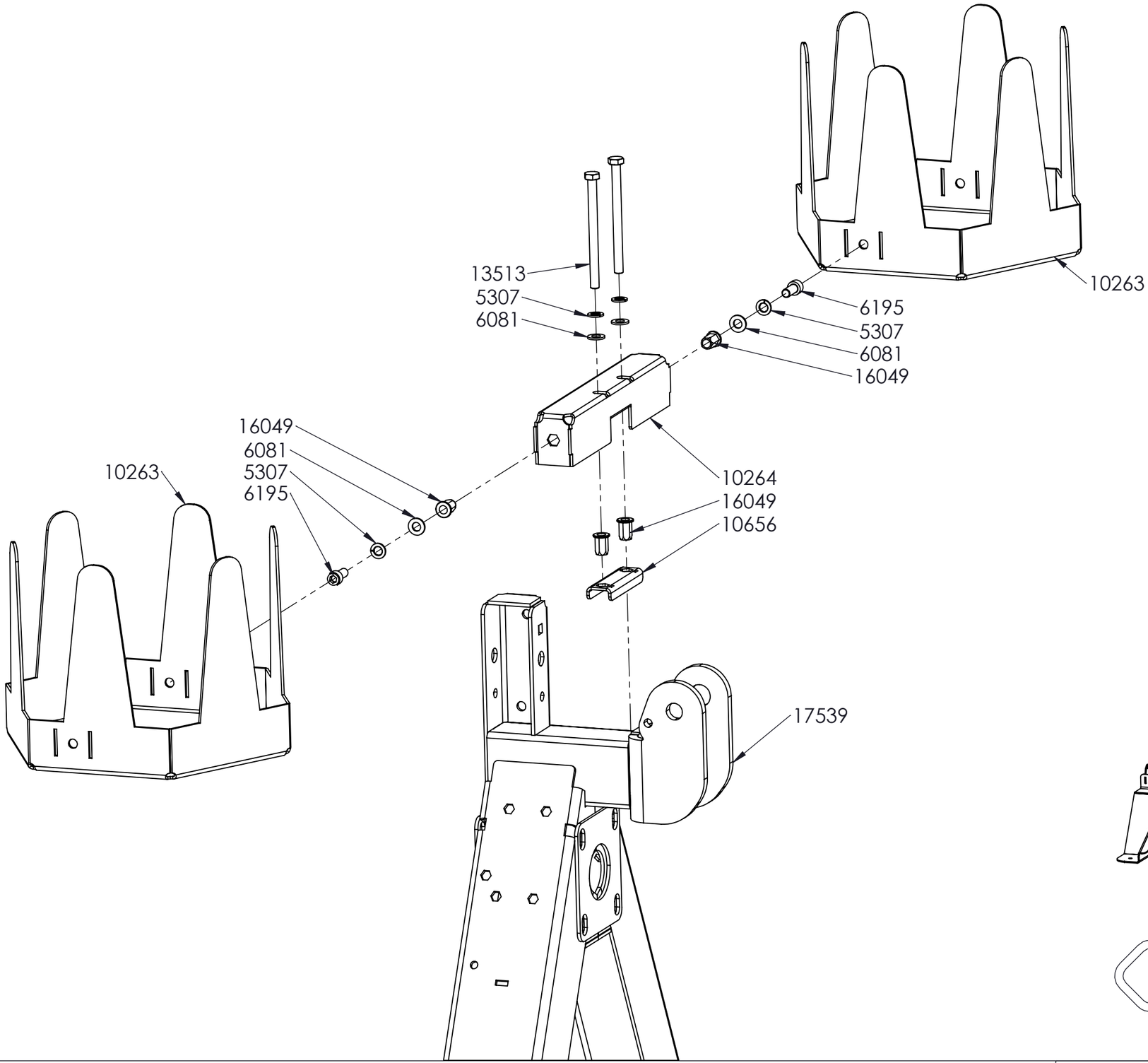

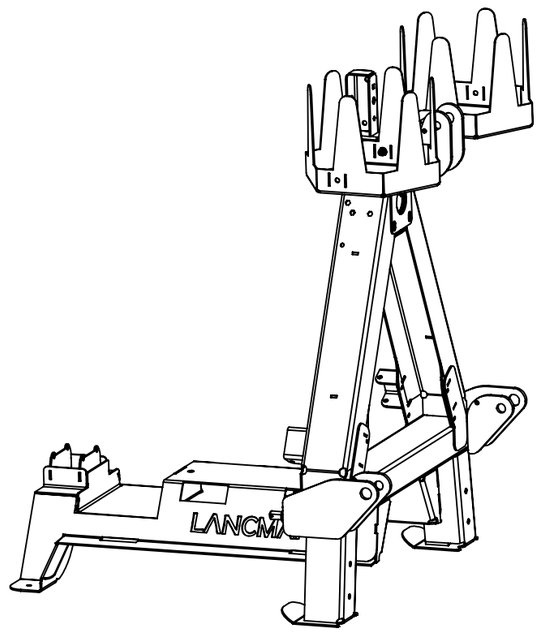

LANCMAN® by GOMARK

LANCMAN 2501 VF SH
LANCMAN 2501 HVF SH

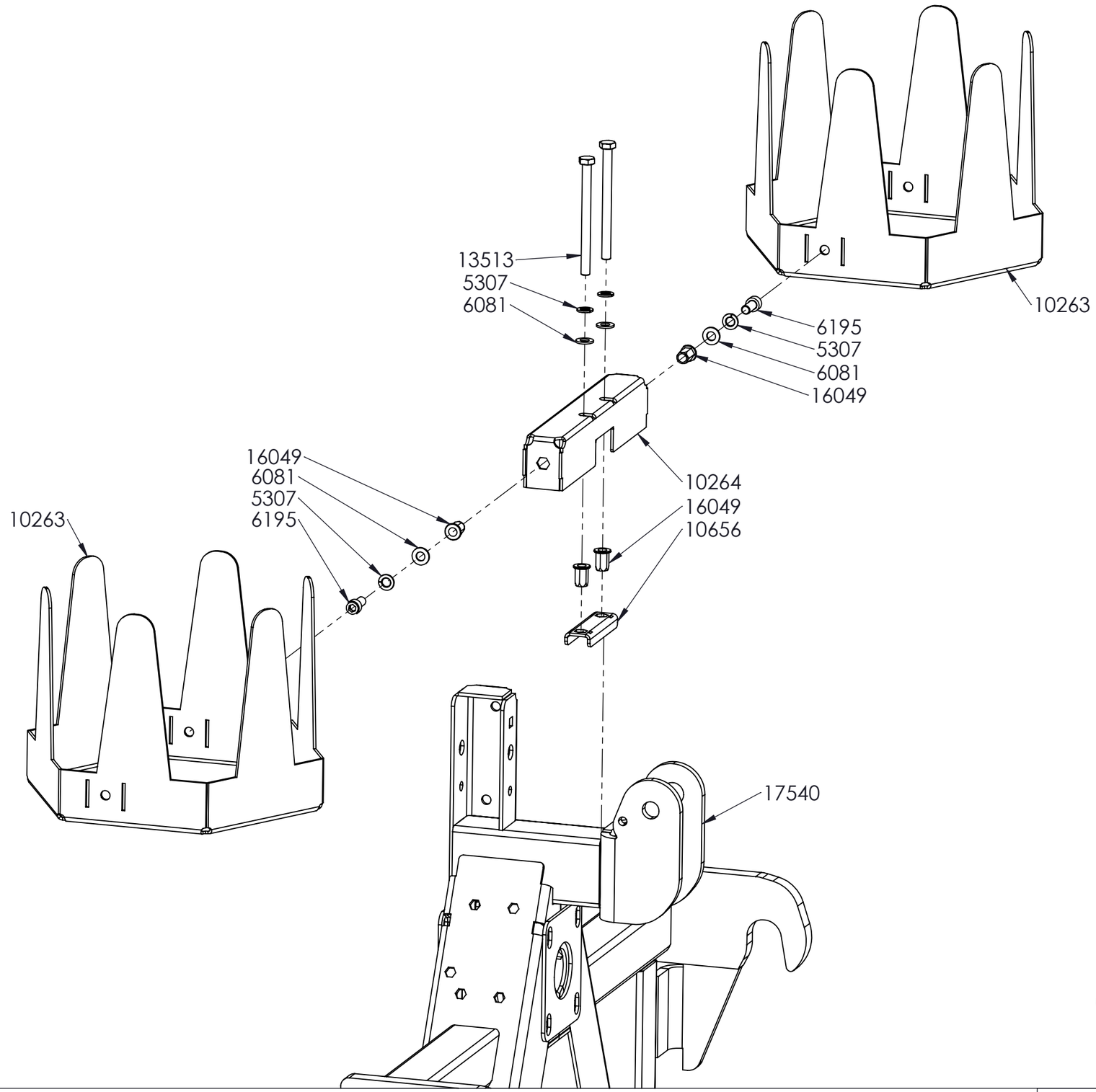

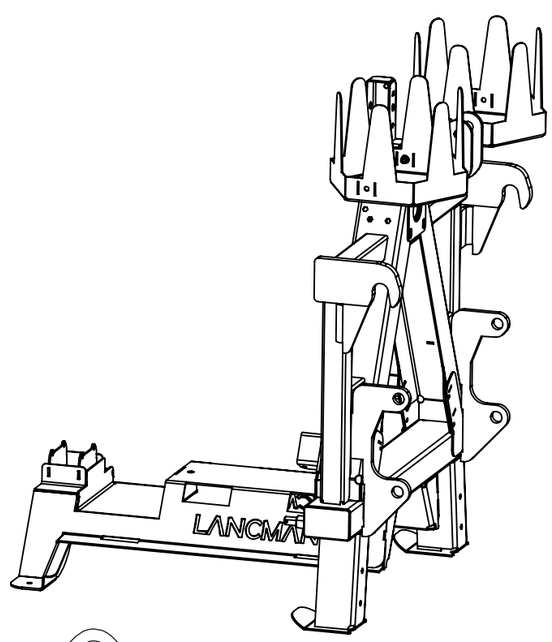

LANCMAN® by GOMARK